JACOBSEN®
A Textron Company

When Performance Matters.™

Eclipse® 2
Technical/Repair Manual
Floating Head Models
118F 122F

CUSTOMERCARE

jacobsen.com

JACOBSEN®
A Textron Company

When Performance Matters.™

Eclipse® 2
Technical/Repair Manual
Floating Head Models
118F 122F



WARNING: If incorrectly used, this machine can cause severe injury. Those who use and maintain this machine should be trained in its proper use, warned of its dangers, and should read the entire manual before attempting to set up, operate, adjust, or service the machine.

©2012 Jacobsen, A Textron Company. All rights reserved.

Foreword

General

This manual provides detailed information and procedures to safely repair and maintain the following:

Jacobsen® Eclipse® 2 greens mowers and associated accessory attachments

This manual is intended to introduce and guide the user through the latest factory-approved troubleshooting and repair techniques and practices.

Before you attempt to troubleshoot or make repairs, you must be familiar with the operation of this machine. Refer to the operator's manual and parts manual for specific information on these topics.

THE INFORMATION CONTAINED IN THIS MANUAL IS BASED ON MACHINES MANUFACTURED UP TO THE TIME OF PUBLICATION. JACOBSEN RESERVES THE RIGHT TO CHANGE ANY OF THIS INFORMATION WITHOUT NOTICE.

California Proposition 65 Warning

WARNING

Certain vehicle components contain or emit chemicals known to the State of California to cause cancer and birth defects or other reproductive harm.

Trademark Acknowledgement

Jacobsen acknowledges the following trademarks for company names or products mentioned within this publication:

Lubriplate® is a trademark of Fiske Brothers Refining Co.

Loctite® and Permatex® are trademarks of Henkel Corporation.

Perma-Lok® is a trademark of National Starch and Chemical Corporation.

JACOBSEN
A Textron Company

How to Use This Manual

This manual is designed to provide multiple ways to locate and access repair information.

Read each section in its entirety before beginning a procedure. Proper understanding of machine operation and components is the key to successful diagnostics and repair.

Make use of special information features within this manual in order to be better prepared to perform repairs. Always follow manual procedures and safety guidelines. Never take shortcuts.

Table of Contents

Major machine components or topics of interest are separated into specific chapters. Each manual lists these chapters in a main Table of Contents.

Chapter Table of Contents

Each chapter begins with a detailed table of contents related to the specific machine component or system.

Use the chapter table of contents to find specific component or procedural information.

Index

An alphabetical Index is located at the back of the manual.

Use the Index to find specific components and related procedures.

Required Tools and Materials

Some procedures will require the use of specific tools and/or materials. These tools and/or materials will be listed for reference, prior to beginning a procedure.

Specifications

Near the beginning of each chapter is a specifications listing. This listing contains any specifications contained within the chapter.

Quick Reference Specifications

A list of all machine specifications can be found in Chapter 2 Specifications and General Information. This is a list of all specifications from each chapter, combined and listed in one place for easy reference.

Warnings and Cautions

Warning and Caution indicators are located throughout the manual at specific points of interest. These notices are given to prevent personal injury, death, and/or equipment damage. Always heed these notices, and practice common sense when performing any maintenance or repair procedure.

Notes

Special notes are given in order to draw attention to detailed instructions. These notes are intended to give further important information regarding the machine and/or a step in a procedure.

Troubleshooting

Troubleshooting charts are provided in each chapter to aid in the diagnostic process. Use these suggestions to aid in identifying a potential mechanical or machine adjustment problem.

Copyright 2012, Jacobsen, A Textron Company
“All rights reserved, including the right to reproduce this material or portions thereof in any form.”

Table of Contents

Safety	1
Specifications and General Information	2
Engine	3
Electrical	4
Power Train	5
Handle and Controls	6
Brakes	7
Cutting Unit	8
Miscellaneous	9
Accessories	10

JACOBSEN
A Textron Company

Chapter 1

Safety

1

Introduction **1-2**

Prepare for the Job **1-2**

Safety Notices **1-2**

Safety Label Locations **1-3**
- Gen-Set Models 1-3
- Battery Pack Models 1-4

Inspect Safety Labels **1-5**

Keep Work Area Clean **1-5**

Keep Work Area Well Ventilated **1-5**

Use Proper Eye and Face Protection **1-5**

Park Mower Safely **1-5**
- Battery Pack Models 1-5
- Gen-Set Models 1-6

Use Lifting Equipment Safely **1-7**

Support Machine Securely **1-8**

Use Compressed Air and Air Tools Safely **1-8**

Service Tires Safely **1-8**

Handle Fuel Safely **1-9**

Store Volatile and Hazardous Materials Safely **1-9**

Handle Chemical Products Safely **1-9**

Service Electrical Components Safely **1-9**

Dispose of Waste Materials Safely **1-10**

JACOBSEN
A Textron Company

1

Introduction

Safety is the most important element of any repair procedure. Knowledge of the procedure to be performed and safe work habits are essential to preventing death, personal injury, or property damage. Use the following statements as a common-sense guide to proper work and tool-use habits.

Prepare for the Job

Preparation is essential to complete a procedure in a safe and efficient manner.

- Wear proper clothing. Loose or baggy clothing could become tangled in moving parts.
- Use eye/face protection. Always use proper eye/face protection to protect your eyes from flying debris or chemical splatters.
- Wear protective footwear. Wear safety shoes (steel-toe) to protect your feet from falling objects.
- Use gloves when handling parts. Parts may have sharp edges or may be hot.
- Remove jewelry prior to servicing electrical systems.
- Prepare proper tools and equipment. Always use the correct tool for the job. Improper or homemade tools can cause injury or machine damage.
- Prepare needed parts and materials. Gather the needed parts and materials before beginning the procedure.
- Allow machine to cool. Many components can get hot during operation. Be sure to allow enough time for components to cool before beginning service.
- Prepare proper work-space lighting. A well-lit work area can make the job easier.
- Follow procedures and safety warnings. Service procedures are written to be as safe and efficient as possible. Never take shortcuts.
- Be prepared for emergencies. Accidents can happen, even under the best conditions. Fire extinguishers and first aid kits should be well maintained and easily accessible.

Safety Notices

Throughout this manual, the following key safety words will be used to alert the reader of potential hazards. Become familiar with these words and their meaning. Take all precautions to avoid the hazards described.



This safety alert symbol is used to alert you to potential hazards.

DANGER

Indicates an imminently hazardous situation which, if not avoided, WILL result in death or serious injury.

WARNING

Indicates a potentially hazardous situation which, if not avoided, COULD result in death or serious injury.

CAUTION

Indicates a potentially hazardous situation which, if not avoided, MAY result in minor or moderate injury and property damage. It may also be used to alert against unsafe practices.

NOTICE

Indicates a potentially hazardous situation which, if not avoided, MAY result in property damage. It may also be used to alert against unsafe practices.

Safety Label Locations

Gen-Set Models

See Figures 1-1 and 1-2.

Become familiar with machine safety labels and locations. The following illustrations show safety label locations on the machine.

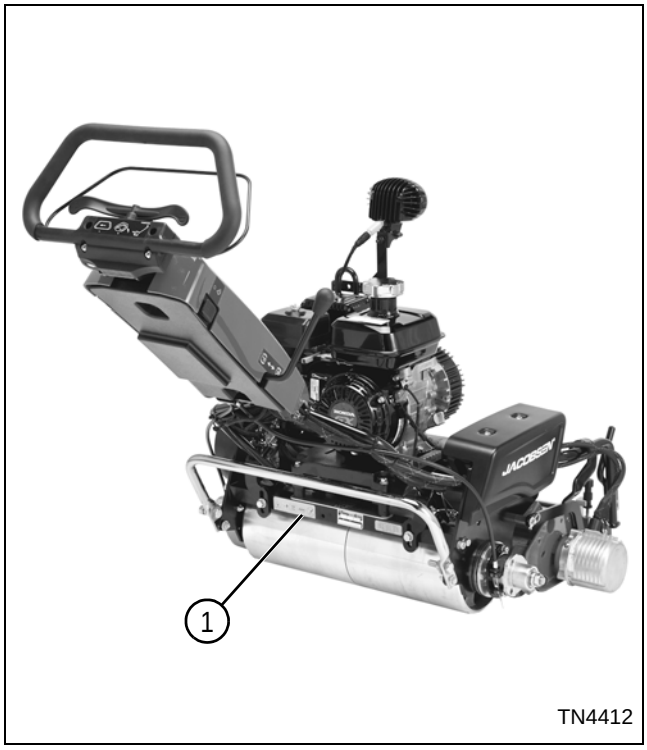

Figure 1-1

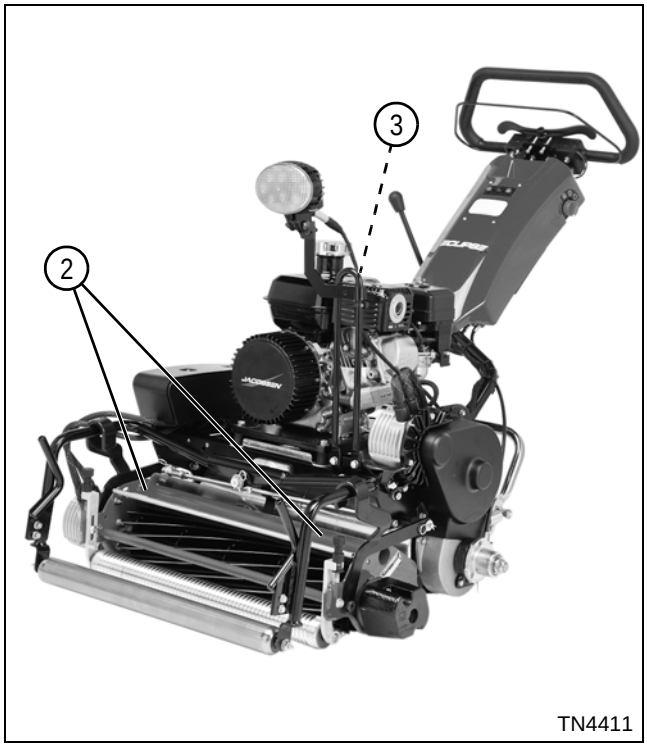

Figure 1-2

1

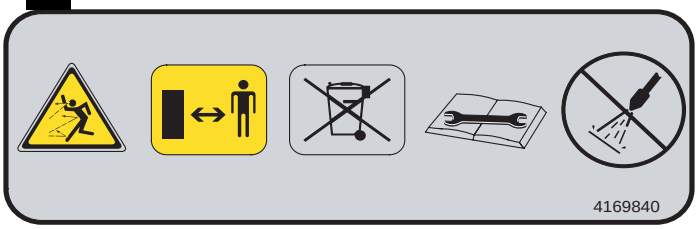

2



3

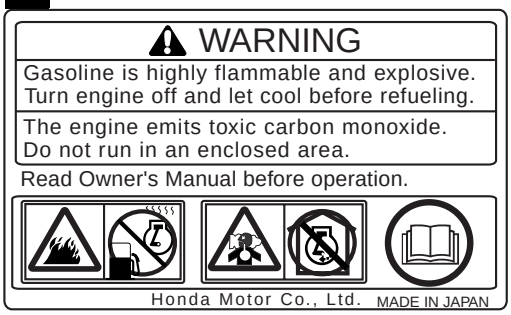

Battery Pack Models

See Figures 1-3 and 1-4.

Become familiar with machine safety labels and locations. The following illustrations show safety label locations on the machine.

1

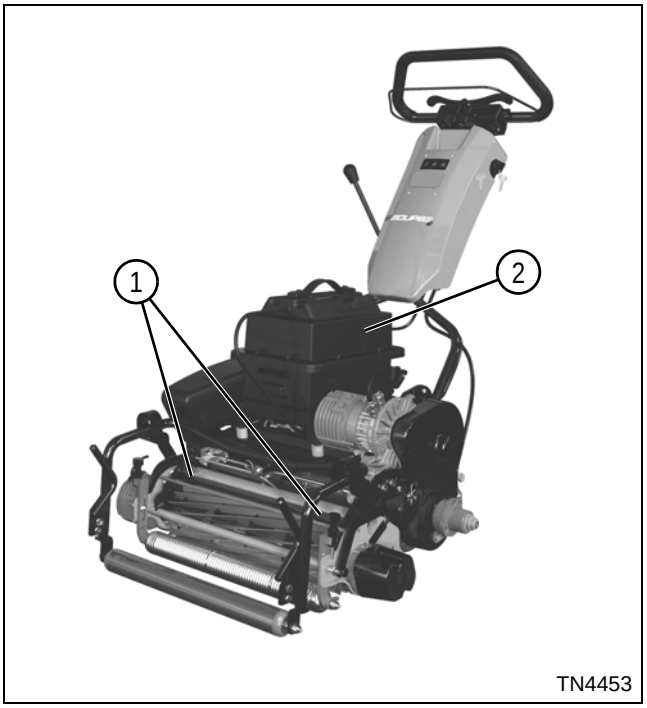

Figure 1-3



Figure 1-4



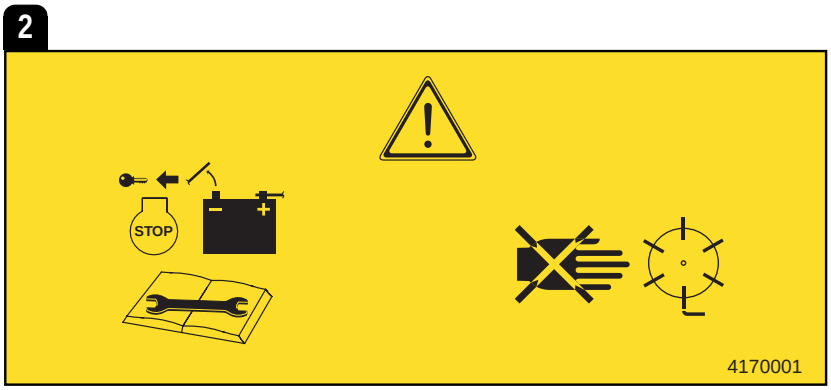

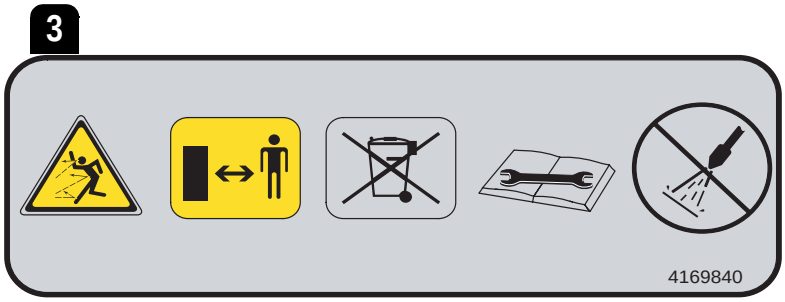

Inspect Safety Labels

Safety decals are critical to the safe operation of the mower. Inspect the mower for any damaged, missing, or unreadable decals. Replace decals as needed before placing the mower back into service.

Keep Work Area Clean

A clean, organized, well-lit work area is important to promote safe working conditions.

- Keep floor clean of debris and clear of parts and tools.
- Clean up any spilled fuel, oil, and/or chemicals immediately.
- Store all air hoses and electrical cords properly when not in use.

Keep Work Area Well Ventilated

WARNING

Never operate the engine without proper ventilation; exhaust fumes can be fatal if inhaled.

Certain test and adjustment procedures require the engine to be running. Be sure work area is well ventilated; never run the engine in an enclosed area.

Use Proper Eye and Face Protection

WARNING

Always use approved personal protection equipment. Avoid workplace hazards by wearing properly maintained, approved eye and face protection. Failure to use appropriate protection equipment may result in death or serious injury.

Always wear eye protection while in a shop environment.

- Safety Glasses: Safety glasses offer a minimum level of protection from flying debris.
- Face Shields: Face shields are often used along with safety glasses to offer a higher level of protection when sparks and flying debris are present.
- Vented Goggles: Goggles offer side protection not offered by safety glasses alone.
- Unvented Goggles: Unvented goggles offer protection from chemical splashes and vapors.

Park Mower Safely

Battery Pack Models

See Figures 1-5 through 1-7.

WARNING

Before cleaning, adjusting, or repairing this equipment, disengage mow switch, engage park brake, move key switch to the off position, and remove key to prevent injuries.

When performing maintenance other than adjustments that require the reel and/or traction motors to be running, disconnect the battery pack plug to prevent accidental motor engagement and bodily injury.

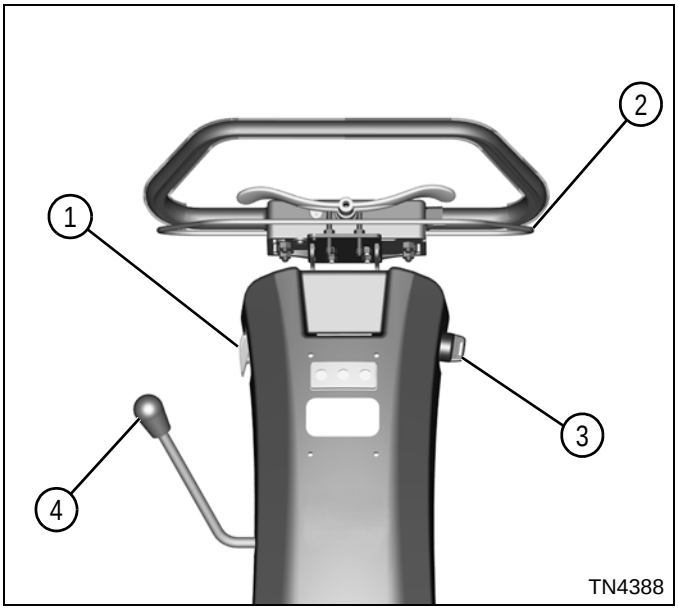

Figure 1-5

1. Release the Operator Presence Control (OPC) bail (2).
2. Engage the park brake lever (4).
3. Disengage the mow switch (1).
4. Move key switch (3) to the off position and remove key.

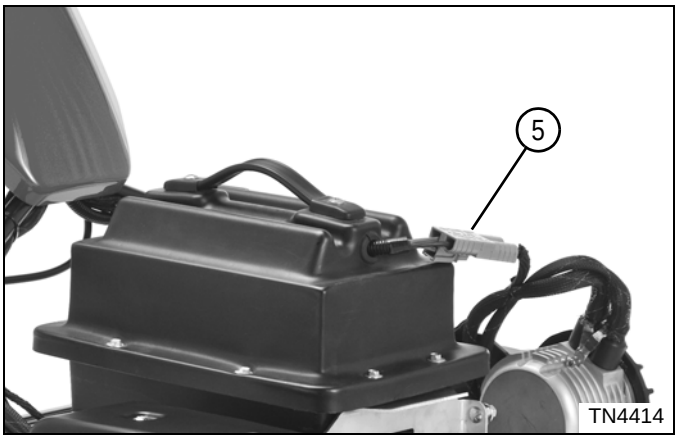

Figure 1-6

5. Disconnect battery pack connector (5).

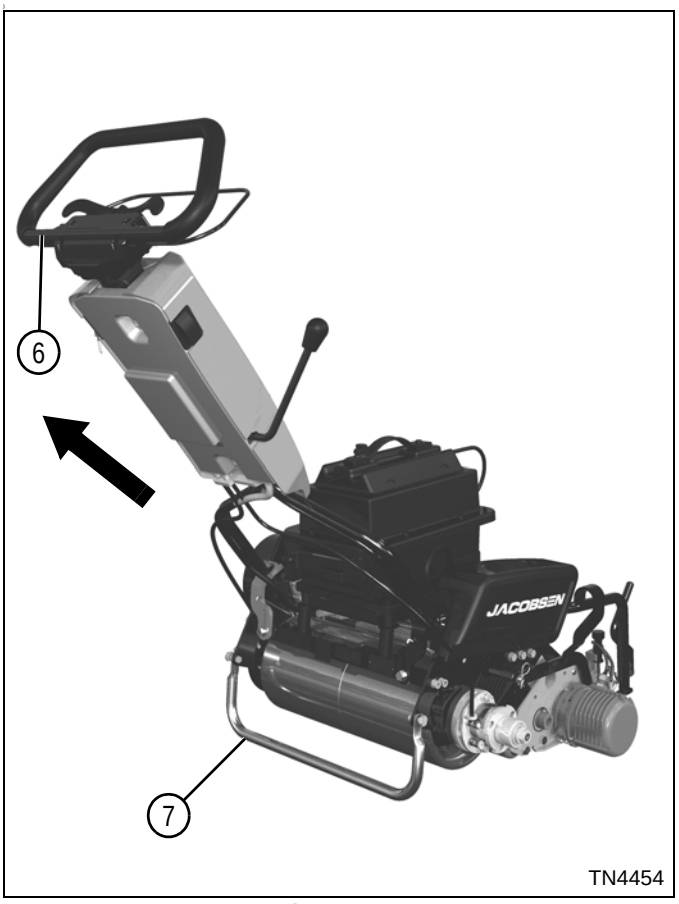

Figure 1-7

6. Lower and hold the kickstand (7) against the ground. Grab lower part of handle at base (6), and pull up and back until the mower rests securely on the kickstand.

Gen-Set Models

See Figures 1-8 through 1-10.

WARNING

Before cleaning, adjusting, or repairing this equipment, disengage all drives, engage park brake, and stop engine to prevent injuries.

When performing maintenance other than adjustments that require the engine to be running, disconnect gen-set connector, remove the spark plug wire, and place the wire away from the plug to prevent accidental starting and bodily injury.

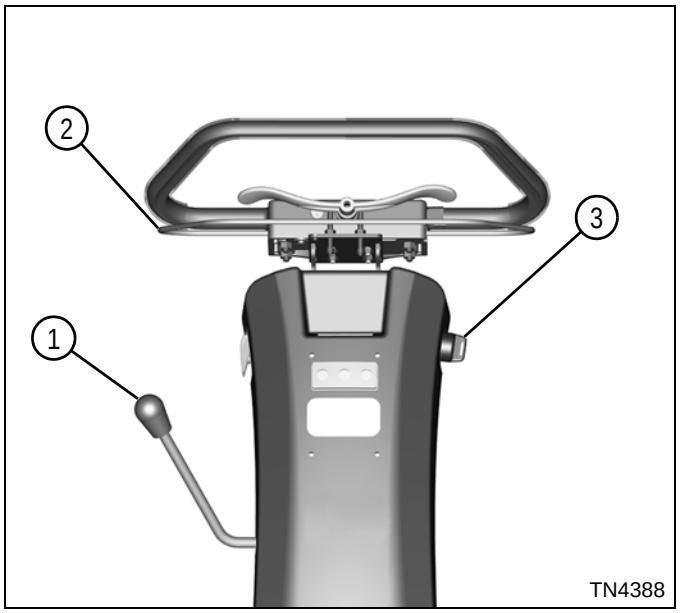

Figure 1-8

1. Release the Operator Presence Control (OPC) bail (2).
2. Engage the park brake lever (1).
3. Move key switch (3) to the off position and remove key.

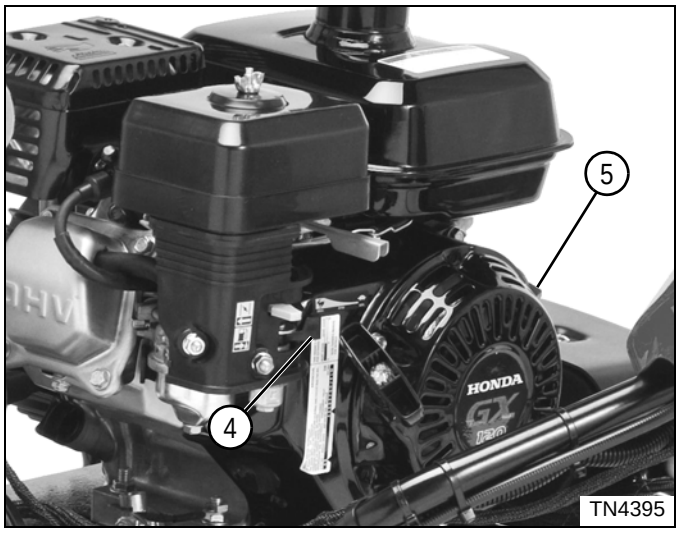

Figure 1-9

4. Move engine on/off switch (5) to off position.
5. Close fuel shutoff valve (4).

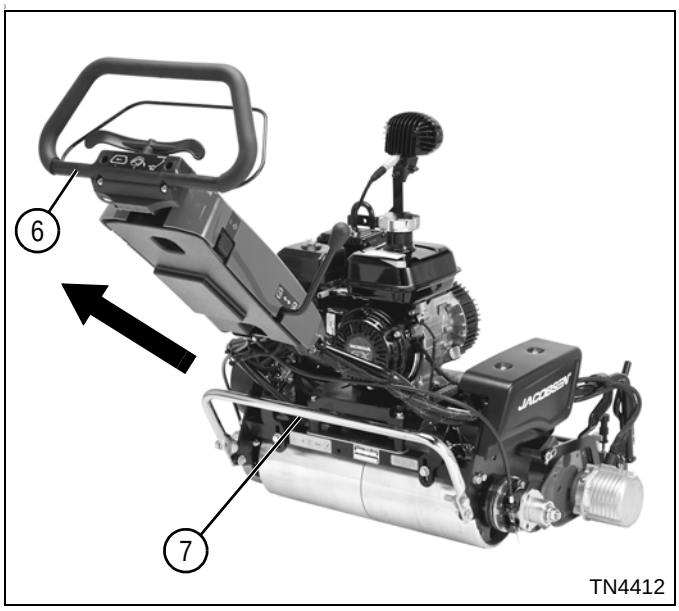

Figure 1-10

6. Lower and hold the kickstand (7) against the ground. Grab lower part of handle at base (6), and pull up and back until the mower rests securely on the kickstand.

Use Lifting Equipment Safely

WARNING

Always check the lifting capacity and condition of hoists, slings, cables, or chains before use. Using underrated or worn lifting components can result in death or serious injury.

- Always use a lifting device with a lifting capacity greater than the weight of the item being lifted.
- Secure the load to the lifting device using cables, chains, or slings rated to handle the load being lifted. Fasteners being used to connect lifting devices must be strong enough to handle the load. Also be sure the mounting point of the load is strong enough to handle the load.
- When using a lifting device, always connect the load so it is balanced.
- Always use a lifting device on a hard, level surface.
- Lower the lifting device to the lowest point before moving. Move the load slowly.
- Always support the load as soon as possible; never leave a load suspended in mid-air.

Support Machine Securely

WARNING

- **Support the machine using properly rated jackstands. Never work under a machine supported only by a jack.**
- **Do not use wood or concrete blocks to support the machine. Failure to properly support the machine may result in death or serious injury.**

Use Compressed Air and Air Tools Safely

WARNING

Always wear approved eye and ear protection while using compressed air. Misuse of compressed air could result in death or serious injury.

- **When using air nozzles, do not exceed an air pressure rating of 30 psi (206.8 kPa).**
- **Never direct air nozzles or tools at a person.**
- **Never point air nozzles directly at skin.**

- Compressed air is a useful tool when used in a safe manner.
- Always use eye and ear protection while using compressed air and air tools.
- When using air tools, do not exceed the air pressure rating for the tool.
- When using an impact wrench, always use approved impact sockets. Never use standard sockets on an impact wrench.
- Disconnect the air supply before changing air tool attachments.
- Never point air nozzles or air tools at another person.
- Always maintain air tools properly.

Service Tires Safely

WARNING

An inflated tire contains explosive force. Use care when handling wheels and tires.

- Always wear safety glasses or goggles.
- Use proper lifting methods when working with wheels and tires.
- When working on an inflated tire, never position yourself directly over the work area.
- When dismounting or mounting tires, use a wheel holder or tire machine. Use proper tire mounting tools and equipment. Never use screwdrivers or makeshift tools to force a tire on or off a wheel.
- Be sure tire irons and mounting tools are free of grease and oil. Grip them firmly.
- Inspect wheel parts for rust, damage, or distortion. Never use wheels that are out-of-round, rusted, or cracked.
- Never hammer on wheels with a steel hammer. Use rubber-covered hammers.
- When inflating tires, always use an inflation cage. Always stand away from the valve stem.
- Use accurate, tested inflation gauges to set air pressures.

Handle Fuel Safely

Handle fuel with care—it is highly flammable.

WARNING

- **Never remove the fuel cap from the fuel tank, or add fuel, when the engine is running or while the engine is hot.**
- **Do not smoke when handling fuel. Never fill or drain the fuel tank indoors.**
- **Do not spill fuel. Clean spilled fuel immediately.**
- **Never handle or store fuel containers near an open flame or any device that may create sparks and ignite the fuel or fuel vapors.**
- **Be sure to reinstall and tighten fuel cap securely.**
- **Use an approved container; the spout must fit inside the fuel filler neck. Avoid using cans and funnels to transfer fuel.**

Store fuel according to local, state, or federal ordinances and recommendations from your fuel supplier.

Never overfill or allow the tank to become empty.

Use clean, fresh fuel.

Do not fill above the fuel filler neck.

Store Volatile and Hazardous Materials Safely

Store volatile materials in approved containers that are clearly marked. Containers should be stored in an approved safety cabinet away from possible sources of ignition. Storage areas and cabinets should be well ventilated to prevent the possible buildup of fumes.

Handle Chemical Products Safely

WARNING

Exposure to chemical products could result in serious injury. Handle chemical products with care. Refer to the chemical manufacturer's Material Safety Data Sheet (MSDS) for information regarding health hazards, safe handling, and emergency response procedures.

Routine service often requires the use of various chemical products, including lubricants and cleaning solutions. Many of these chemicals are flammable and can pose health risks if not handled properly.

- Never mix chemicals. Mixing chemicals can produce toxic or explosive results.
- Follow the manufacturer's recommendations for safe usage and handling of the product.
- Various materials may pose a health hazard if used incorrectly. A Material Safety Data Sheet (MSDS) contains important information regarding proper handling and health hazards, as well as emergency response procedures. Contact the chemical manufacturer to obtain an MSDS for the chemical product.

Service Electrical Components Safely

WARNING

Always disconnect the negative terminal first and positive terminal last. Connect the positive terminal first and negative terminal last. Use care when testing live circuits to prevent arcing. Arcing could result in death or serious injury.

- Disconnect the battery negative (–) cable before removing or installing electrical components. Always connect the battery negative (–) cable last.
- Certain test and adjustment procedures must be performed with the battery connected. Use care to prevent arcing when working on live circuits or components. Arcing can cause component damage and could ignite flammable materials.

Dispose of Waste Materials Safely

Routine service can produce waste products such as used oil and grease and used batteries.

If not handled properly, these materials can pose a threat to the environment.

Collect fluids in well-marked, approved storage containers. Some waste fluids can react with certain types of plastics. Make sure the fluid to be stored is compatible with the storage container. Never use food or beverage containers to store waste fluids.

IMPORTANT

Never dispose of waste fluids by pouring them on the ground, down sewer drains, or into any body of water.

- Dispose of waste fluids properly at approved local recycling centers. If recycling facilities are not available, contact your local community for the correct disposal procedure for waste fluids.
- Dispose of old batteries properly. Battery electrolyte contains sulfuric acid and other hazardous materials. Never place an old battery in the trash. Batteries must be disposed of in a manner consistent with EPA and/or local regulations.

Chapter 2

Specifications and General Information

Mower Identification **2-2**
Serial Number 2-2
Model Identification Number 2-2
Optional Machine Accessories 2-2
Cutting Unit Identification **2-3**
Serial Number 2-3
Component Location **2-4**
Gen-Set Models 2-4
Battery Pack Models 2-5
Specifications **2-6**
Quick Reference Specifications 2-6
Standard Torque Values **2-10**
Inch Fastener Torque Values 2-10
Metric Fastener Torque Values 2-10
Lubricant Specifications **2-11**
Grease 2-11
Synthetic Lubricants 2-11
Lubricant Storage 2-11
Avoid Mixing of Lubricants 2-11
Operational Checks **2-11**
Park Brake Check 2-11
Key Switch Check 2-12
Operator Presence Control (OPC) System Check 2-13
Mow Switch Check 2-13

JACOBSEN
A Textron Company

Mower Identification

See Figure 2-1.



Figure 2-1

Serial Number

An identification plate like the one shown, listing the serial number, is attached to the rear frame.

Always provide the serial number of the unit when ordering replacement parts or requesting service information.

Model Identification Number

63336

Eclipse® 2 118F Gen-Set powered (11-blade, 18-inch floating head reel) with InCommand™ control system, Operator Presence Control (OPC), brakes, and kickstand.

63337

Eclipse® 2 118F Gen-Set powered (15-blade, 18-inch floating head reel) with InCommand™ control system, Operator Presence Control (OPC), brakes, and kickstand.

63340

Eclipse® 2 122F Gen-Set powered (11-blade, 22-inch floating head reel) with InCommand™ control system, Operator Presence Control (OPC), brakes, and kickstand.

63341

Eclipse® 2 122F Gen-Set powered (15-blade, 22-inch floating head reel) with InCommand™ control system, Operator Presence Control (OPC), brakes, and kickstand.

63345

Eclipse® 2 118F Battery Pack powered (11-blade, 18-inch floating head reel) with InCommand™ control system, Operator Presence Control (OPC), brakes, and kickstand.

63346

Eclipse® 2 118F Battery Pack powered (15-blade, 18-inch floating head reel) with InCommand™ control system, Operator Presence Control (OPC), brakes, and kickstand.

63349

Eclipse® 2 122F Battery Pack powered (11-blade, 22-inch floating head reel) with InCommand™ control system, Operator Presence Control (OPC), brakes, and kickstand.

63350

Eclipse® 2 122F Battery Pack powered (15-blade, 22-inch floating head reel) with InCommand™ control system, Operator Presence Control (OPC), brakes, and kickstand.

Optional Machine Accessories

This manual is structured to cover all basic machine components and repair. The addition of accessories can affect certain troubleshooting, adjustment, and repair procedures.

If the machine requiring service is equipped with an accessory kit, see **Section 10, "Accessories"** for troubleshooting, removal, repair, and installation procedures.

Cutting Unit Identification

See Figure 2-2.



Figure 2-2

Serial Number

An identification plate like the one shown, listing the serial number, is attached to the reel left side frame.

Always provide the serial number of the cutting unit when ordering replacement parts or requesting service information.

Component Location

Gen-Set Models

See Figures 2-3 and 2-4.

CAUTION

Become familiar with operator controls, machine components, and correct operating procedures before beginning repair procedures.

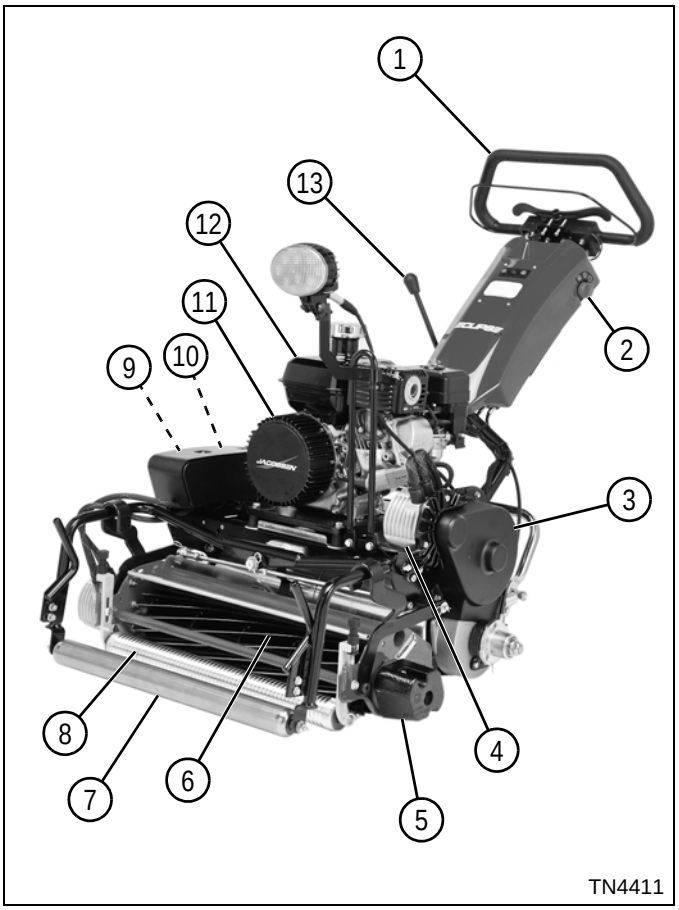

1	Operator Handle	8	Front Roller
2	Key Switch	9	Traction Motor Controller
3	Belt Cover	10	Reel Motor Controller
4	Traction Motor	11	Gen-Set
5	Reel Counterweight	12	Engine
6	Reel	13	Park Brake Lever
7	Floating Head Frame Roller		

Figure 2-3: Component Location—Front

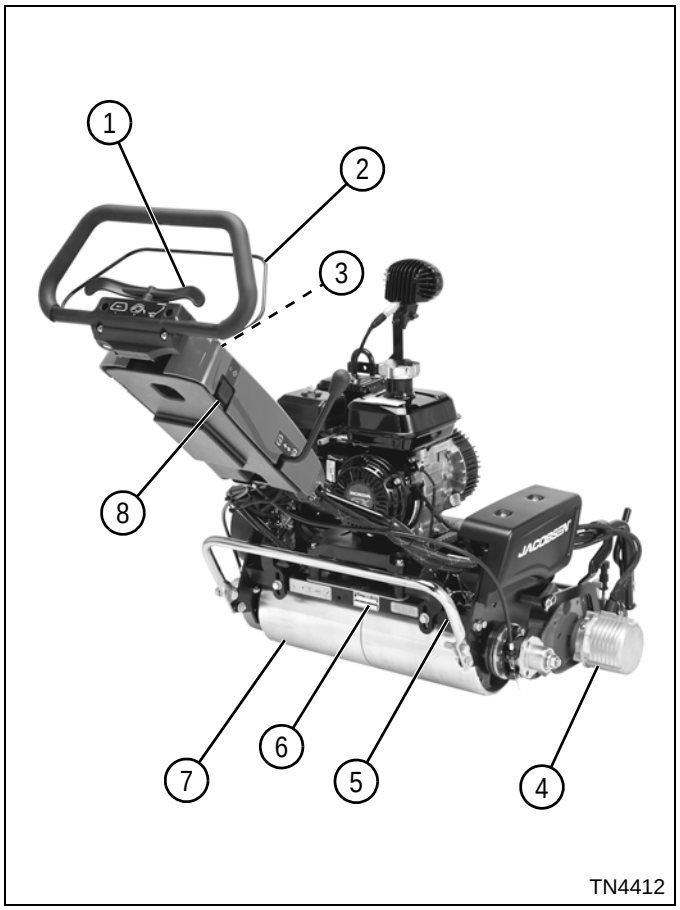

1	Speed Control Paddle	5	Kickstand
2	Operator Presence Control (OPC) Bail	6	Product Identification Plate
3	LCD Controls and Display	7	Traction Drum
4	Reel Motor	8	Mow Switch

Figure 2-4: Component Location—Rear

Battery Pack Models

See Figures 2-5 and 2-6.

CAUTION

Become familiar with operator controls, machine components, and correct operating procedures before beginning repair procedures.

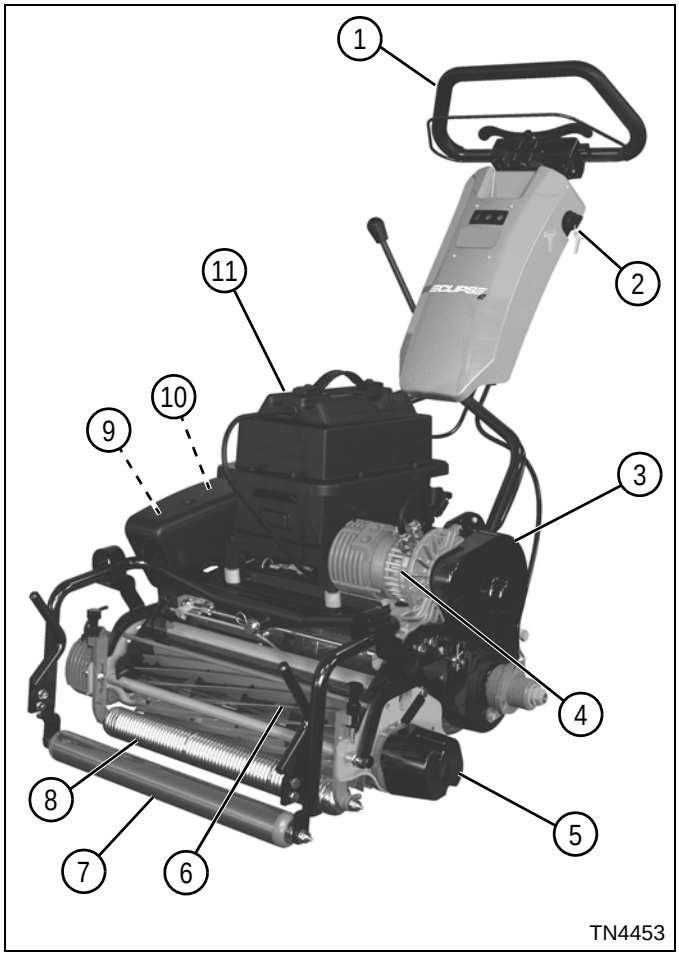

1	Operator Handle	7	Floating Head Frame Roller
2	Key Switch	8	Front Roller
3	Belt Cover	9	Traction Motor Controller
4	Traction Motor	10	Reel Motor Controller
5	Reel Counterweight	11	Battery Pack
6	Reel		

Figure 2-5: Component Location—Front

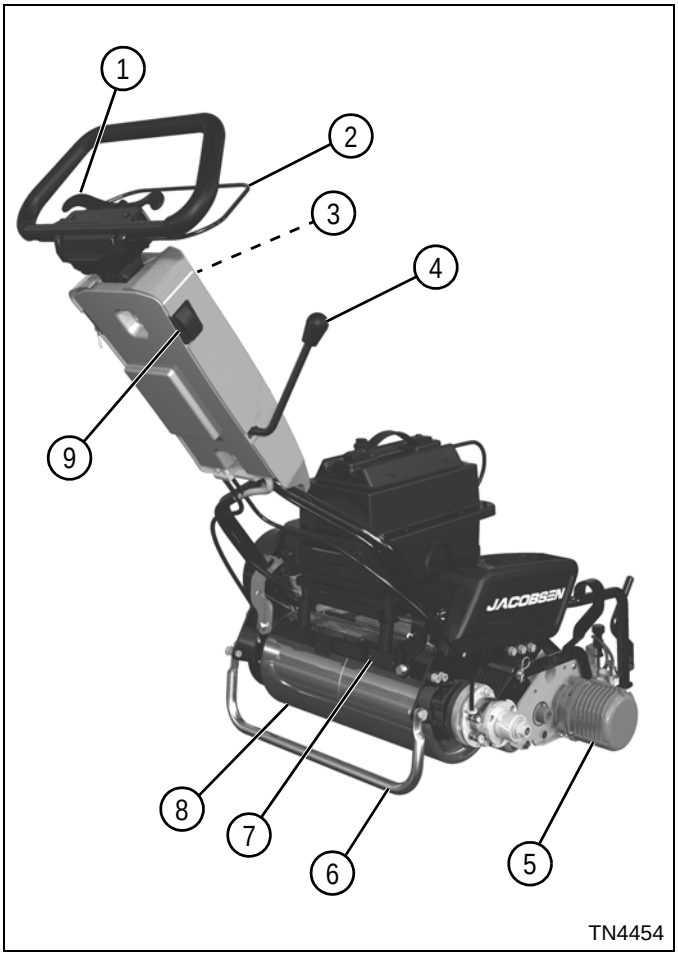

1	Speed Control Paddle	6	Kickstand
2	Operator Presence Control (OPC) Bail	7	Product Identification Plate
3	LCD Controls and Display	8	Traction Drum
4	Park Brake Lever	9	Mow Switch
5	Reel Motor		

Figure 2-6: Component Location—Rear

Specifications

Quick Reference Specifications

General Specifications

Engine	
Manufacturer/Model	Honda/GX120
Engine Type	4-Stroke, Overhead Valve, Single Cylinder
Displacement cu in. (cc)	7.3 (118)
Bore x Stroke in. (mm)	2.4 x 1.7 (60 x 42)
Cooling System	Forced Air
Ignition System	Transistorized Magneto
PTO Shaft Rotation	Counterclockwise
Recommended Spark Plug	BPR6ES (NGK) W20EPR-U (ND)
Spark Plug Gap in. (mm)	0.028–0.031 (0.7–0.8)

Electrical Power	
Removable Battery Pack	Four 12-Volt, Sealed Lead Acid Batteries, Wired in Series, with Battery Gauge and Protective Box
Gen-Set	Nominal 48 VDC
Motors	48-Volt, Brushless, Keyed Shaft
Motor Power Rating hp (kW)	1.3 (1.0)
Motor Operating Speed rpm	0–2200
Motor Rotation	Bi-Directional

Traction and Reel Motor System	
Reel Motor	Independent Motor
Traction Motor	Belt Driven via Independent Motor
Traction Reduction Ratio	15.15:1
Differential	Full Automotive Type, Housed in Traction Drum
Rear Drive Drum Composition	Machined Aluminum Alloy
Mow Speed mph (km/h)	0–3.8 (0–6.1)
Transport Wheels (Optional)	(2) Bi-Directional, Pneumatic, 11 x 4 Goodyear Softrac

Front Roller Weights		
18 Inch Grooved Machined Aluminum Roller (PN 063318)	lb (kg)	7 (3.18)
18 Inch Grooved Machined Steel Roller (PN 068616)	lb (kg)	16 (7.26)
18 Inch Heavy Smooth Roller with Scraper (PN 068626)	lb (kg)	20 (9.07)
18 Inch Light Smooth Roller (PN 4108920)	lb (kg)	6 (2.72)
22 Inch Grooved Assembly Steel Disc Roller (PN 068527)	lb (kg)	10 (4.54)
22 Inch Grooved Segmented Machined Aluminum Roller (PN 068673)	lb (kg)	8 (3.63)
22 Inch Light Smooth Roller (PN 068530)	lb (kg)	7 (3.18)
22 Inch Heavy Smooth Roller (PN 068641)	lb (kg)	18 (8.16)
22 Inch Grooved Machined Steel Roller (PN 068613)	lb (kg)	18 (8.16
22 Inch Grooved Machined Aluminum Roller (PN 068614)	lb (kg)	8 (3.63)

Mower		
Height-of-Cut Range (Bench Setting)	in. (mm)	1/16–7/16 (1.6–11.1)
High-Profile Cut Yield	in. (mm)	5/32–7/16 (3.96)
Low-Profile Cut Yield	in. (mm)	1/8–7/32 (3.17)
Tournament Cut Yield	in. (mm)	3/32–5/32 (2.38)
Super Tournament Cut Yield	in. (mm)	5/64–7/64 (1.58)
Championship Cut Yield	in. (mm)	1/16 –7/64 (1.58)
Reel Diameter	in. (mm)	5 (127)
Reel Composition		Hardened High-Manganese Carbon Steel
Width of Cut	in. (cm)	18 (457), 22 (557.5)

Mower Weights (Without Grass Catcher)		
Model 6336 (With Steel Groove Roller 68618)	lb (kg)	254 (115.22)
Model 6337 (With Steel Groove Roller 68618)	lb (kg)	257 (116.6)
Model 6340 (With Machined Aluminum Grooved Roller 68614)	lb (kg)	265 (120.2)
Model 6341 (With Machined Aluminum Grooved Roller 68614)	lb (kg)	268 (121.6)
Model 6345 (With Steel Groove Roller 68618)	lb (kg)	274 (124.3)
Model 6346 (With Steel Groove Roller 68618)	lb (kg)	277 (125.6)
Model 6349 (With Machined Aluminum Grooved Roller 68614)	lb (kg)	285 (129.3)
Model 6350 (With Machined Aluminum Grooved Roller 68614)	lb (kg)	288 (130.6)

Engine

Repair Specifications		
Engine Mounting Carriage Bolt Torque	lb-ft (N·m)	13 (17.7)

Electrical

Test and Adjustment Specifications		
Ceramic Resistor Resistance at 68° F	ohms	5 ± 5%
120 Ohm Resistor Connector Resistance at 68° F	ohms	120 ± 10%
Throttle Potentiometer Low End Resistance at 68° F	ohms	18.9–35.1
Throttle Potentiometer High End Resistance at 68° F	ohms	3710–6890
Bail Potentiometer Resistance at 68° F	ohms	3640–6760

Repair Specifications		
Battery Pack Fuse Nut Torque	lb-in. (N·m)	25 (2.82)
Generator Engine Shaft Screw Torque	lb-ft (N·m)	20.4 (27.7)
Generator Mounting Screw Torque	lb-in. (N·m)	68 (7.7)
Generator Adapter Plate Mounting Screw Torque	lb-ft (N·m)	14.4 (9.5)
Generator Cover Mounting Screw Torque	lb-in. (N·m)	68 (7.7)

Power Train

Check and Adjustment Specifications		
Traction (Transfer) Drive Belt Maximum Deflection with 3.5–6.3 lb (15.6–28.0 N) of Force Applied at the Midpoint Between Pulleys.	in. (mm)	0.14 (3.5)
Traction (Final) Drive Belt Maximum Deflection with 12.5–15.2 lb (55.6–67.6 N) of Force Applied at the Midpoint Between Pulleys.	in. (mm)	0.10 (2.5)

Brakes

Repair Specifications		
Park Brake Lever Actuating Force	lb (kg)	10 (4.5)
Park Brake Band—Anchor Pin Center-to-Center Distance (Park Brake Released)	in. (mm)	1.50 (38)

Cutting Unit

Check and Adjustment Specifications		
Bedknife-to-Reel Gap	in. (mm)	0.001–0.003 (0.025–0.075)
Reel Bearing Pre-Load	in. (mm)	0.040 (1.0)
Bedknife Front Face Height (minimum)	in. (mm)	0.035 (0.9)
Bedknife Front Face Angle (all bedknives)	degrees	5
Bedknife Top Face Angle (rear relief) (all bedknives except Super Tournament)	degrees	8–10
Super Tournament Bedknife Top Face Angle (rear relief)	degrees	5–7
Reel Blade Relief Angle	degrees	45

Accessories

Check and Adjustment Specifications		
Turf Groomer Eccentric Mounting Screw Torque	lb-ft (N·m)	8–10 (10.8–13.6)
Turf Groomer Belt Tension Link Mounting Screw Torque	lb-ft (N·m)	20 (27.1)

Repair Specifications		
Solid Front Roller Assembly Maximum Rotational Resistance	lb-in. (N·m)	6 (0.68) Maximum with No End Play
Solid Tube Front Roller Lock Nut Torque	lb-ft (N·m)	10–30 (13.5–40.6)
Solid Tube Front Roller Shaft-to-Bearing Rotational Resistance	lb-in. (N·m)	0–1 (0–0.11) with No End Play
Solid Tube Front Roller Assembly Maximum Rotational Resistance	lb-in. (N·m)	6 (0.68) Maximum with No End Play
Grooved Front Roller Lock Nut Torque	lb-ft (N·m)	10–30 (13.5–40.6)
Grooved Front Roller Shaft-to-Bearing Rotational Resistance	lb-in. (N·m)	0–1 (0–0.11) with No End Play
Grooved Front Roller Assembly Rotational Resistance	lb-in. (N·m)	6 (0.68) Maximum with No End Play
Grooved Disc Roller Assembly Maximum Rotational Resistance	lb-in. (N·m)	6 (0.68) Maximum with No End Play
Grooved Segmented Front Roller Jam Nut Torque	lb-ft (N·m)	70 (95)
Grooved Segmented Front Roller Assembly Rotational Resistance	lb-in. (N·m)	6 (0.68) Maximum with No End Play
Push Broom Assembly Rod-To-Cam Gap	in. (mm)	0.25 (6.3)

Standard Torque Values

NOTICE

All torque values included in these charts are approximate and are for reference only. Use of these torque values is at your sole risk. Jacobsen is not responsible for any loss, claim, or damage arising from the use of these charts.

Extreme caution should always be used when using any torque value.

NOTE

Jacobsen uses Grade 5 plated bolts as standard, unless otherwise noted. When tightening plated bolts, use the value given for lubricated.

Inch Fastener Torque Values

AMERICAN NATIONAL STANDARD FASTENERS											
SIZE	UNITS	 GRADE 5		 GRADE 8		SIZE	UNITS	 GRADE 5		 GRADE 8	
		Lubricated	Dry	Lubricated	Dry			Lubricated	Dry	Lubricated	Dry
#6-32	in-lb (Nm)	–	20 (2.3)	–	–	7/16-14	ft-lb (Nm)	37 (50.1)	50 (67.8)	53 (71.8)	70 (94.9)
#8-32	in-lb (Nm)	–	24 (2.7)	–	30 (3.4)	7/16-20	ft-lb (Nm)	42 (56.9)	55 (74.6)	59 (80.0)	78 (105)
#10-24	in-lb (Nm)	–	35 (4.0)	–	45 (5.1)	1/2-13	ft-lb (Nm)	57 (77.2)	75 (101)	80 (108)	107 (145)
#10-32	in-lb (Nm)	–	40 (4.5)	–	50 (5.7)	1/2-20	ft-lb (Nm)	64 (86.7)	85 (115)	90 (122)	120 (162)
#12-24	in-lb (Nm)	–	50 (5.7)	–	65 (7.3)	9/16-12	ft-lb (Nm)	82 (111)	109 (148)	115 (156)	154 (209)
1/4-20	in-lb (Nm)	75 (8.4)	100 (11.3)	107 (12.1)	143 (16.1)	9/16-18	ft-lb (Nm)	92 (124)	122 (165)	129 (174)	172 (233)
1/4-28	in-lb (Nm)	85 (9.6)	115 (13.0)	120 (13.5)	163 (18.4)	5/8-11	ft-lb (Nm)	113 (153)	151 (204)	159 (215)	211 (286)
5/16-18	in-lb (Nm)	157 (17.7)	210 (23.7)	220 (24.8)	305 (34.4)	5/8-18	ft-lb (Nm)	128 (173)	170 (230)	180 (244)	240 (325)
5/16-24	in-lb (Nm)	173 (19.5)	230 (26.0)	245 (27.6)	325 (36.7)	3/4-10	ft-lb (Nm)	200 (271)	266 (360)	282 (382)	376 (509)
3/8-16	ft-lb (Nm)	23 (31.1)	31 (42.0)	32 (43.3)	44 (59.6)	3/4-16	ft-lb (Nm)	223 (302)	298 404	315 (427)	420 (569)
3/8-24	ft-lb (Nm)	26 (35.2)	35 (47.4)	37 (50.1)	50 (67.8)	7/8-14	ft-lb (Nm)	355 (481)	473 (641)	500 (678)	668 (905)

Metric Fastener Torque Values

METRIC FASTENERS										
SIZE	UNITS	 4.6		 8.8		 10.9		 12.9		Non-Critical Fasteners into Aluminum
		Lubricated	Dry	Lubricated	Dry	Lubricated	Dry	Lubricated	Dry	
M4	Nm (in-lb)	–	–	–	–	–	–	3.83 (34)	5.11 (45)	2.0 (18)
M5	Nm (in-lb)	1.80 (16)	2.40 (21)	4.63 (41)	6.18 (54)	6.63 (59)	8.84 (78)	7.75 (68)	10.3 (910	4.0 (35)
M6	Nm (in-lb)	3.05 (27)	4.07 (36)	7.87 (69)	10.5 (93)	11.3 (102)	15.0 (133)	13.2 (117)	17.6 (156)	6.8 (60)
M8	Nm (in-lb)	7.41 (65)	9.98 (88)	19.1 (69)	25.5 (226)	27.3 (241)	36.5 (323)	32.0 (283)	42.6 (377)	17.0 (150)
M10	Nm (ft-lb)	14.7 (11)	19.6 (14)	37.8 (29)	50.5 (37)	54.1 (40)	72.2 (53)	63.3 (46)	84.4 (62)	33.9 (25)
M12	Nm (ft-lb)	25.6 (19)	34.1 (25)	66.0 (48)	88.0 (65)	94.5 (70)	125 (92)	110 (81)	147 (108)	61.0 (45)
M14	Nm (ft-lb)	40.8 (30)	54.3 (40)	105 (77)	140 (103)	150 (110)	200 (147)	175 (129)	234 (172)	94.9 (70)

Lubricant Specifications

Grease

Lubricate fittings with grease that meets or exceeds NLGI Grade 2 LB specifications. Apply grease with a manual grease gun; fill slowly until grease begins to seep out. Do not use a compressed-air grease gun.

Synthetic Lubricants

Synthetic grease is a suitable alternative lubricant, provided it meets or exceeds NLGI Grade 2 LB specifications. Apply synthetic grease with a manual grease gun; fill slowly until grease begins to seep out. Do not use a compressed-air grease gun.

Lubricant Storage

Use of clean lubricants is essential to efficient operation of equipment.

- Always store lubricants in approved, clean containers.
- Store containers in an area free from dirt, filings, moisture, and other contaminants.
- Clearly mark containers for easy identification of contents.
- Always dispose of used containers properly.

Avoid Mixing of Lubricants

Avoid mixing different brands or types of oil. Lubricants are specifically manufactured to meet certain specifications and performance standards.

Mixing different brands or types of lubricants can reduce the functionality of certain additives and interfere with the performance of the lubricant, resulting in possible equipment damage.

Operational Checks

WARNING

Never attempt to operate the machine unless you have read the Operator's Manual and know how to operate all controls correctly.

The operational check procedures are meant to verify the correct operation of the control systems. Before placing the mower back into service, all checks should be performed to ensure that each system is working properly.

Park Brake Check

See Figure 2-7.

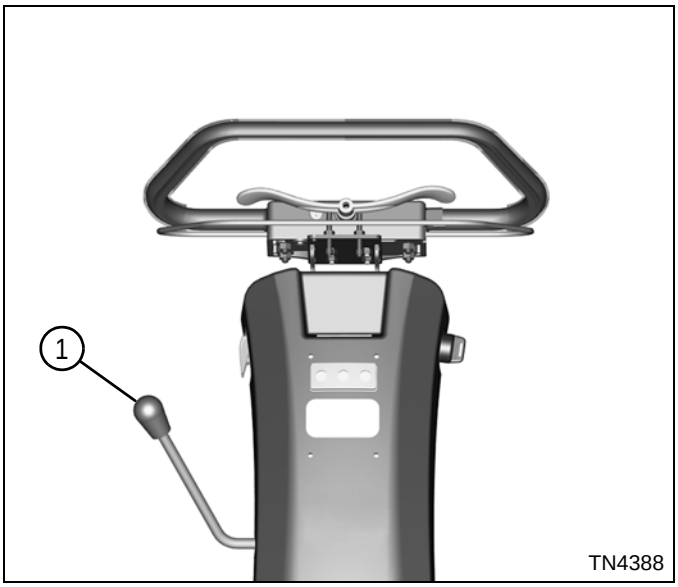

Figure 2-7

1. Connect a spring scale to the park brake lever (1).
2. Pull the spring scale to engage the park brake and record the reading.

A properly adjusted park brake will require 10 lb (4.5 kg) of force to engage.

If the park brake does not meet specification, adjust or repair the brake system as needed before returning the mower to service. (See "Park Brake Check and Adjustment" on page 7-4.)

Key Switch Check

See Figures 2-8 through 2-10.

The unit is equipped with a key switch to stop the traction and reel motors from the operator's position.

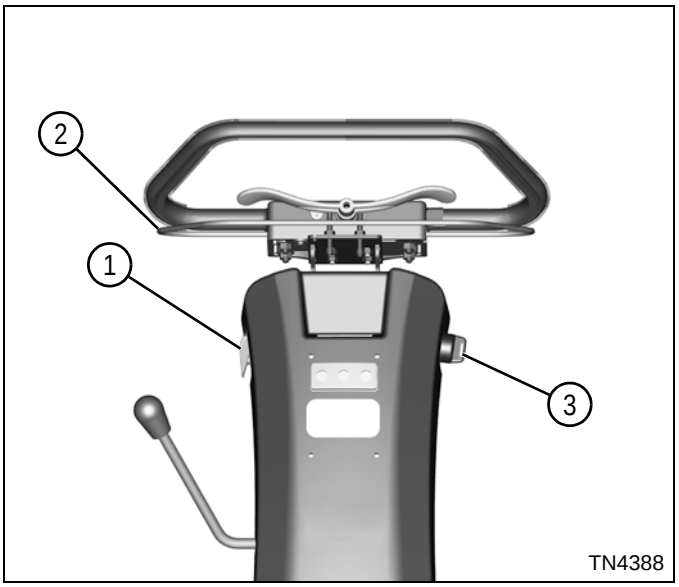

Figure 2-8

1. Place the mower securely on the kickstand and move the mow switch (1) to the off position.
2. Move the key switch (3) to the start/on position.
3. **Gen-Set Models:** Move the key switch (3) to the on position, start the engine, then move key switch to the start position to power up the controller.
4. Slide the Operator Presence Control (OPC) bail (2) to the left and engage the traction drive.
5. Move the key switch (3) to the off position. The traction drive will stop.

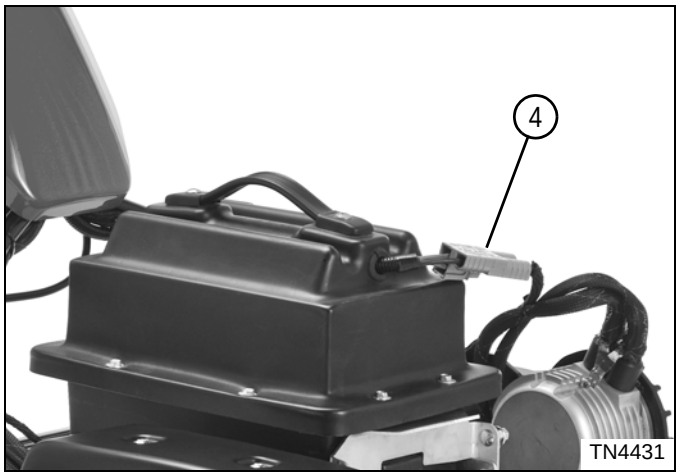

Figure 2-9: Battery Pack Models

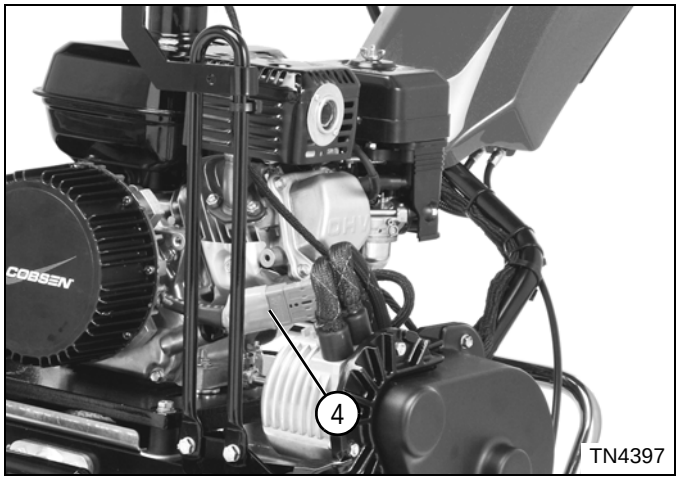

Figure 2-10: Gen-Set Models

If the traction drive does not stop, disconnect the battery pack/gen-set connector (4) to stop the traction drive and immediately repair the system.

Operator Presence Control (OPC) System Check

See Figures 2-11 and 2-12.

WARNING

Never operate equipment with the Operator Presence Control (OPC) system disconnected or malfunctioning. Do not disconnect or bypass any switch.

The OPC system is intended to protect the operator and others from injury by stopping the reel and drive mechanism as soon as the operator releases the OPC bail.

1. Park the mower safely. (See “Park Mower Safely” on page 1-5.)

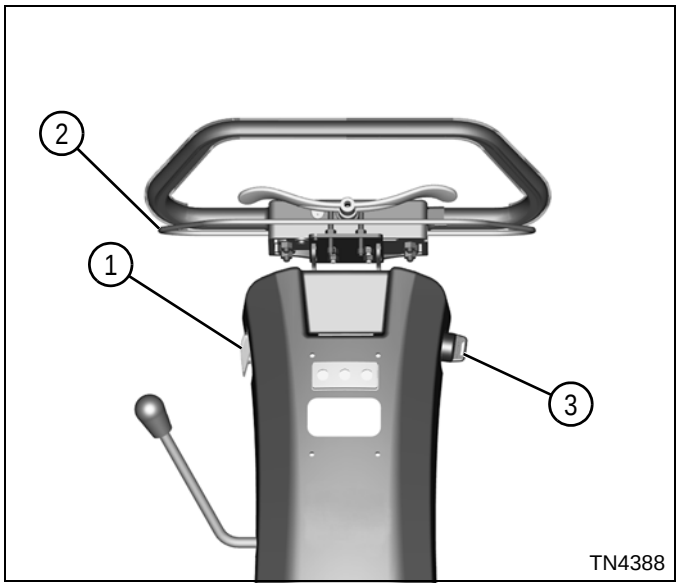

Figure 2-11

2. Move the mow switch (1) to the off position.
3. Move the key switch (3) to the start/on position.
4. **Gen-Set Models:** Move the key switch (3) to the on position, start the engine, then move key switch to the start position to power up the controller.

   Does the drive mechanism engage before the OPC bail is engaged?

   YES *Move key switch to the off position immediately and repair the system.*
5. Slide OPC bail (2) to the left and engage.

   Traction motor will be energized, and traction drum will begin to turn.

   Does the traction drive engage?

   NO *Move key switch to the off position immediately and repair the system.*
6. Release the OPC bail.

   Bail will disengage, and traction drive will stop.

   Does the traction drive continue turning after the OPC bail is released?

   YES *Move the key switch to the off position immediately and repair the system.*

Mow Switch Check

See Figure 2-12.

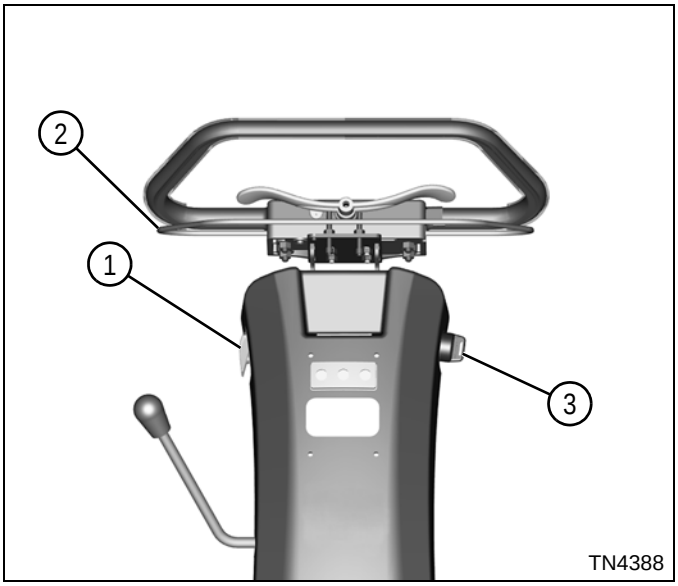

Figure 2-12

1. Place the mower securely on the kickstand.
2. Move key switch (3) to the start/on position.
3. **Gen-Set Models:** Move the key switch (3) to the on position, start the engine, then move key switch to the start position to power up the controller.
4. Move mow switch (1) to the on position.
5. Slide the Operator Presence Control (OPC) bail (2) to the left and engage.

   Reel will begin to turn.

   Does the reel spin?

   NO *Move the key switch to the off position immediately and repair the system.*
6. Release the OPC bail.

   Reel will stop.

   Does the reel continue to turn after the OPC bail is released?

   YES *Move the key switch to the off position immediately and repair the system.*

Chapter 3

Engine

Specifications **3-2**
General Engine Specifications 3-2
Repair Specifications 3-2
Troubleshooting **3-3**
Repair **3-4**
Engine 3-4

3

JACOBSEN
A Textron Company

Specifications

General Engine Specifications

Specification		
Manufacturer/Model		Honda/GX120
Engine Type		4-Stroke, Overhead Valve, Single Cylinder
Displacement	cu in. (cc)	7.3 (118)
Bore x Stroke	in. (mm)	2.4 x 1.7 (60 x 42)
Cooling System		Forced Air
Ignition System		Transistorized Magneto
PTO Shaft Rotation		Counterclockwise
Recommended Spark Plug		BPR6ES (NGK) W20EPR-U (ND)
Spark Plug Gap	in. (mm)	0.028–0.031 (0.7–0.8)

Repair Specifications

Specification		
Engine Mounting Carriage Bolt Torque	lb-ft (N·m)	13 (17.7)

Troubleshooting

This troubleshooting chart will cover basic engine troubleshooting information. A separate engine manual, prepared by the engine manufacturer, is supplied with this machine. Refer to the engine manufacturer's manual for further engine troubleshooting information.

Condition	Probable Cause	Remedy
Engine does not start.	Choke not set properly.	Refer to the engine manual for correct choke usage.
	Fuel tank empty.	Fill fuel tank with fresh, clean gasoline.
	Fuel shutoff valve closed.	Open shutoff valve.
	Engine on/off switch in off position.	Move engine on/off switch to on position.
	Key switch in off position.	Move key switch to on position.
	Engine problem.	Refer to the engine manual.
	Loose or corroded engine on/off switch harness connector.	Check engine on/off switch harness connector. (See "Harness Connector Identification" on page 4-9.)
	Loose or corroded ignition coil harness connector.	Check ignition coil harness connector. (See "Harness Connector Identification" on page 4-9.)
Engine is hard to start, runs erratically, stalls, looses power, or stops.	Choke not set properly.	Refer to the engine manual for correct choke usage.
	Dirty or incorrect fuel.	Drain fuel tank and fill fuel tank with fresh, clean gasoline.
	Loose wire connections.	Check wiring connections.
	Air intake clogged.	Refer to the engine manual for air cleaner service information.
	Spark plug worn, dirty, or improperly gapped.	Refer to the engine manual for spark plug service information.
	Vent in fuel filler cap plugged.	Clean fuel filler cap.

Repair

Engine

Removal

See Figures 3-1 through 3-3.

1. Park the mower safely. (See “Park Mower Safely” on page 1-5.)

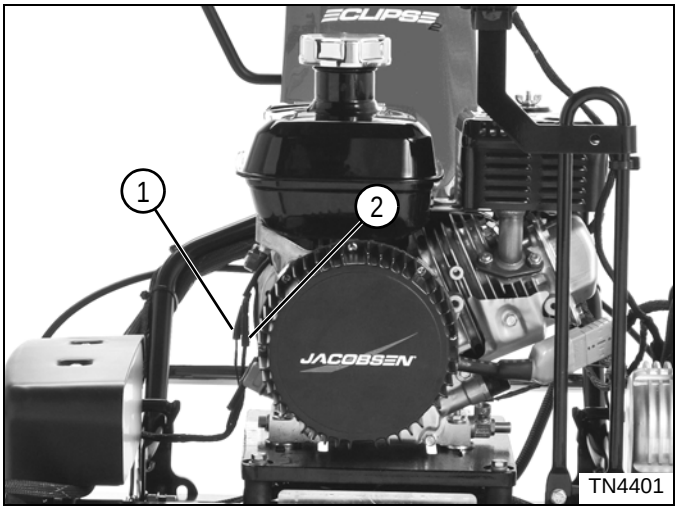

Figure 3-1

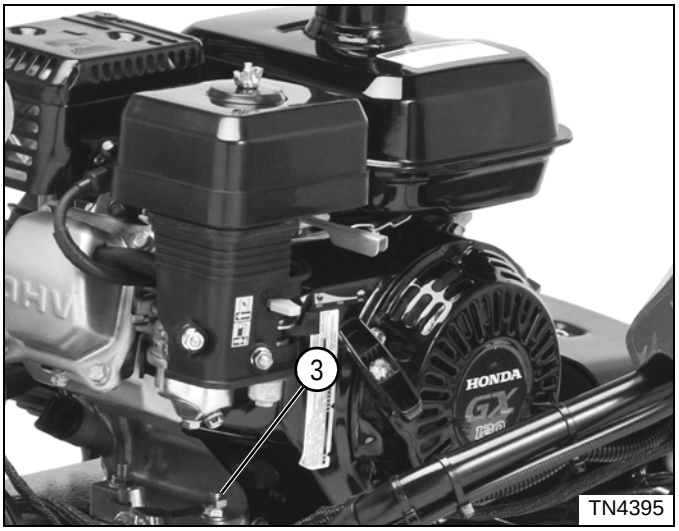

Figure 3-2

NOTE

Label all wires before disconnecting to ensure correct installation.

2. Disconnect engine harness wire connectors (1 and 2).
3. Disconnect ground wire ring terminal (3).

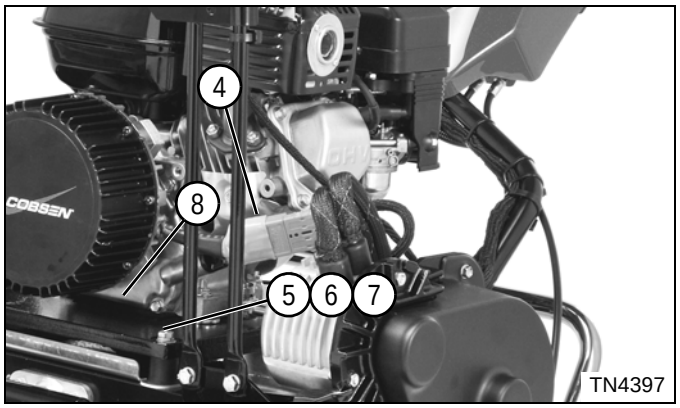

Figure 3-3

4. Disconnect gen-set harness connector (4).
5. Remove four screws (5), lock washers (5), and flat washers (6).
6. Remove engine and mount plate (8) as an assembly.

Disassembly and Assembly

See Figure 3-4.

Required Materials
Dielectric Grease (Jacobsen PN 365422)

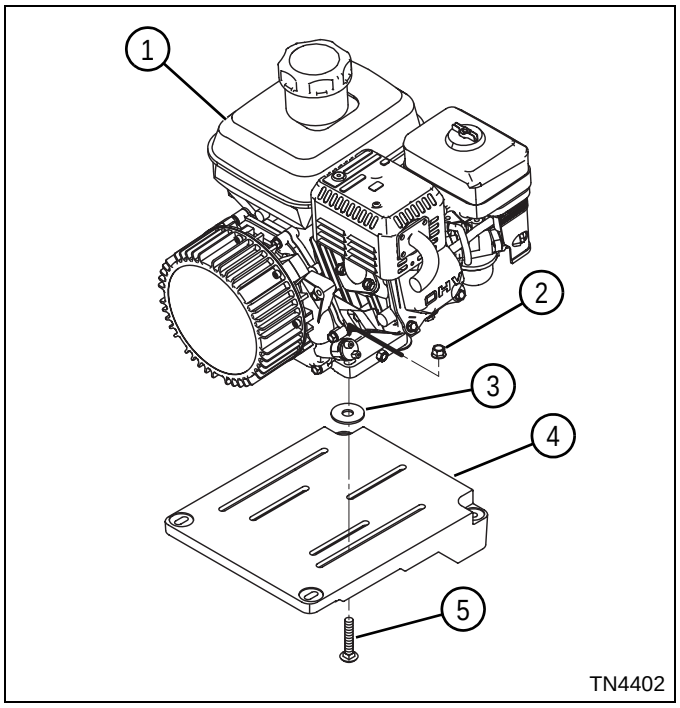

1 Engine Assembly
2 Flange Nut (4)
3 Flat Washer (4)
4 Power Source Mount
5 Carriage Bolt (4)

Figure 3-4

Installation Notes

- *Install engine by reversing the order of removal.*
- *Apply dielectric grease (Jacobsen PN 365422) to any connectors removed.*
- *Tighten carriage bolts (5) to 13 lb-ft (17.7 N·m).*

Chapter 4

Electrical

Specifications **4-3**
Test and Adjustment Specifications 4-3
Repair Specifications 4-3

Component Location **4-4**
Battery Pack Models 4-4
Gen-Set Models 4-5

Electrical Component Symbols **4-6**

Harness Connector Identification **4-9**

Electrical Schematic Component Identification **4-10**
Main Schematic 4-12

Theory and Diagnostic Information **4-15**
48-Volt Power Circuit—Theory of Operation 4-15
48-Volt Power Circuit Schematic—Battery Pack 4-16
48-Volt Power Circuit Schematic—Gen-Set 4-18
Ignition Shutoff Circuit Schematic—Gen-Set 4-20
Switched Power Circuit—Theory of Operation 4-23
Switched Power Circuit Schematic 4-24
Traction Circuit—Theory of Operation 4-27
Traction Circuit Schematic 4-28
Reel Motor Circuit—Theory of Operation 4-31
Reel Motor Circuit Schematic 4-32

Troubleshooting **4-34**

LCD Display—Modes **4-36**
Audible Alerts 4-36
Alert Displays 4-36
Operator Mode 4-38
Maintenance Mode 4-40

JACOBSEN
A Textron Company

Component Testing **4-44**
Electrical System and Component Testing 4-44
Battery Pack Test 4-45
Gen-Set Output Test 4-46
Engine On/Off Switch 4-47
Key Switch Test 4-48
Mow Switch Test 4-49
Light Switch Test 4-49
30A Fuse Test 4-50
Battery Pack Fuse Test 4-50
Ceramic Resistor Test 4-51
120-Ohm Resistor Connector Test 4-51
Traction Motor Test 4-52
Reel Motor Test 4-53
Throttle Potentiometer Test 4-54
Bail Potentiometer Test 4-55
Repair **4-56**
Battery Pack 4-56
Battery Gauge 4-58
Battery Pack Fuse 4-58
Generator 4-59
Key Switch 4-60
30A Fuse 4-60
Mow Switch 4-61
Light Switch 4-61
Reel Motor 4-62
Traction Motor 4-63
Throttle Potentiometer 4-65
Main Control Unit 4-66
Reel Control Unit 4-67
Traction Control Unit 4-68
Battery Tray and Power Module Mount 4-69
Bail Potentiometer 4-70

Specifications

Test and Adjustment Specifications

Specification		
Ceramic Resistor Resistance at 68° F	ohms	5 ± 5%
120-Ohm Resistor Connector Resistance at 68° F	ohms	120 ± 10%
Throttle Potentiometer Low End Resistance at 68° F	ohms	18.9–35.1
Throttle Potentiometer High End Resistance at 68° F	ohms	3710–6890
Bail Potentiometer Resistance at 68° F	ohms	3640–6760

Repair Specifications

Specification		
Battery Pack Fuse Nut Torque	lb-in. (N·m)	25 (2.8)
Generator Engine Shaft Screw Torque	lb-ft (N·m)	20.4 (27.7)
Generator Mounting Screw Torque	lb-in. (N·m)	68 (7.7)
Generator Adapter Plate Mounting Screw Torque	lb-ft (N·m)	14.4 (9.5)
Generator Cover Mounting Screw Torque	lb-in. (N·m)	68 (7.7)

Component Location

Battery Pack Models

CAUTION

Become familiar with operator controls, machine components, and correct operating procedures before beginning repair procedures.

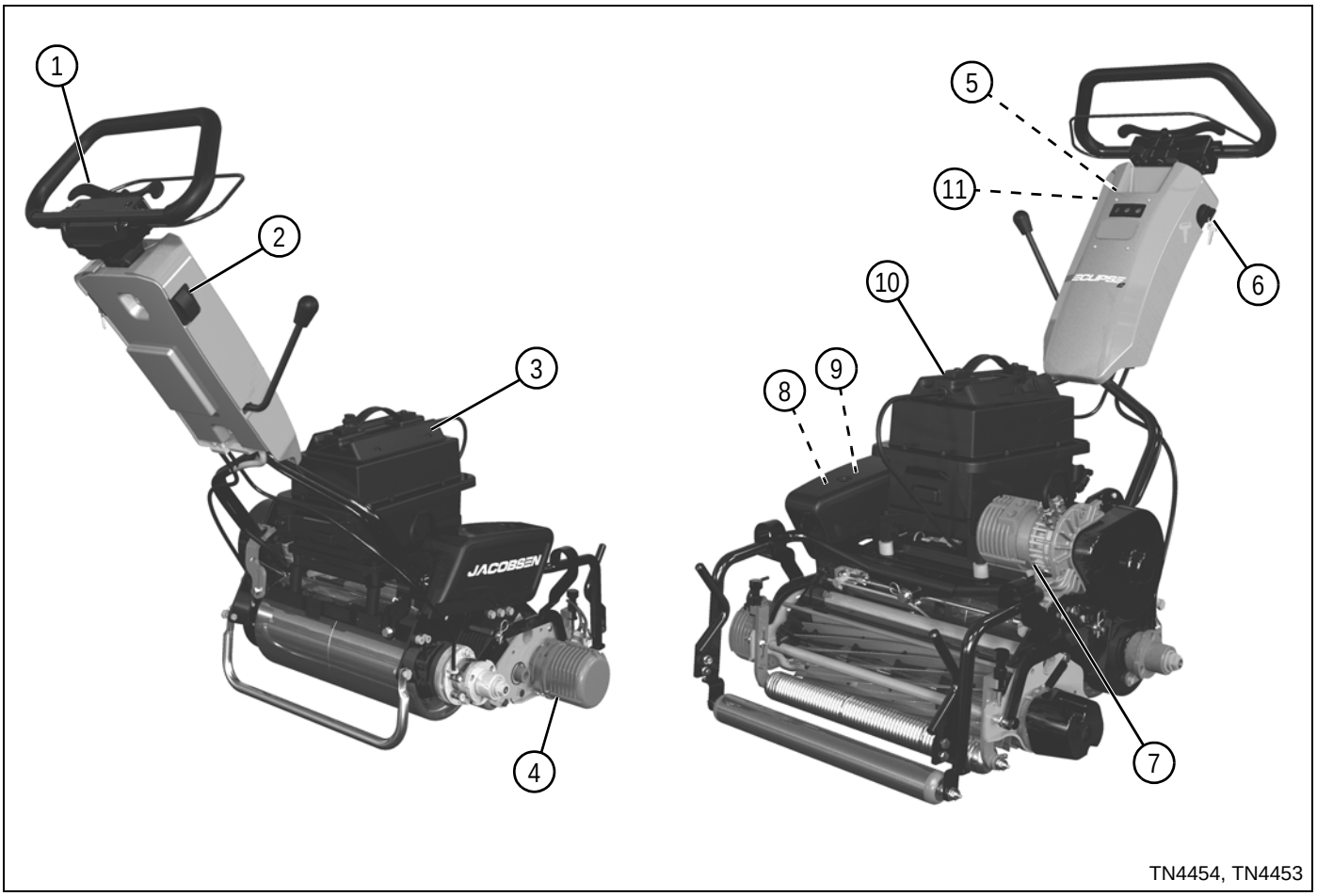

1	Speed Control Paddle	7	Traction Motor
2	Mow Switch	8	Traction Motor Controller
3	Battery Gauge	9	Reel Motor Controller
4	Reel Motor	10	Battery Pack
5	LCD Display and Controls	11	30A Fuse
6	Key Switch		

Figure 4-1

Gen-Set Models

CAUTION

Become familiar with operator controls, machine components, and correct operating procedures before beginning repair procedures.

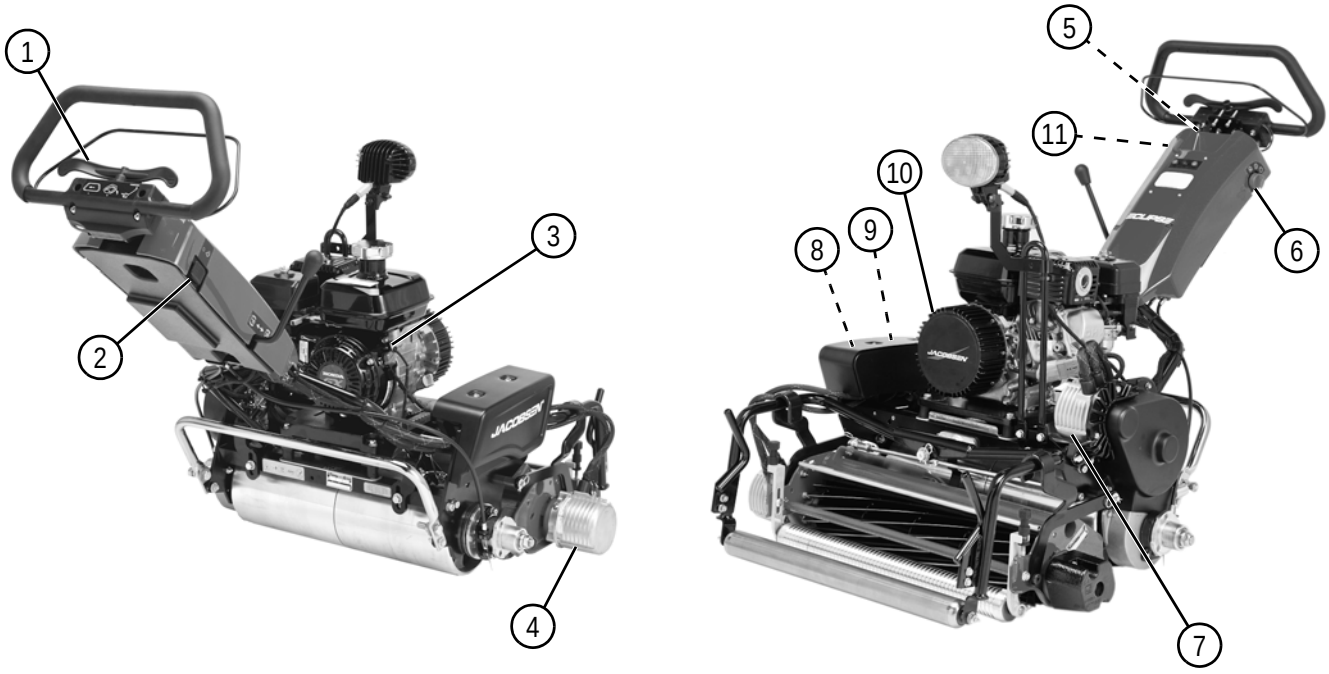

1	Speed Control Paddle	7	Traction Motor
2	Mow Switch	8	Traction Motor Controller
3	Engine On/Off Switch	9	Reel Motor Controller
4	Reel Motor	10	Gen-Set
5	LCD Display and Controls	11	30A Fuse
6	Key Switch		

Figure 4-2

Electrical Component Symbols

The following symbols are used in the electrical schematics to represent various electrical components.

Switches[1]

	Single Pole, Single Throw (SPST)		Double Pole, Single Throw (DPST)
	Single Pole, Double Throw (SPDT)		Double Pole, Double Throw (DPDT)

1 The sample switch symbols shown are just a few of the many switch configurations. Switches are designated by the number of "poles" (circuits controlled) and "throws" (actuator positions). Unless otherwise specified, switches are shown in the "Normally Open" (N.O.) position.

4

Switching Devices

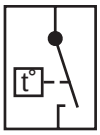	Temperature Switch	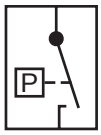	Pressure Switch
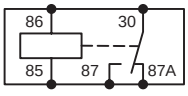	Relay		

Circuit Protection Devices

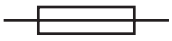	Fuse		Circuit Breaker

Motors and Generating Devices

	Electric Motors (may also include “AC” or “DC”)		Stator
	Alternator		

Actuating Devices

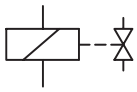	Solenoid Valve	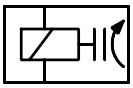	PTO Clutch

Lights

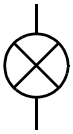	Single-Element Light	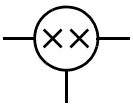	Dual-Element Light

Miscellaneous Symbols

	Enclosure (cabinet, housing, etc.)		Wires (crossing but not connected)
	Ground (to earth)		Wiring Connections
	Ground (to chassis)		Coil
	Direct Current (DC) (as shown on an oscilloscope)		Battery
	Alternating Current (AC) (as shown on an oscilloscope)		Diode
	Resistor		Pin and Socket Connector
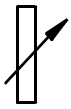	Potentiometer		

Harness Connector Identification

See Figure 4-3.

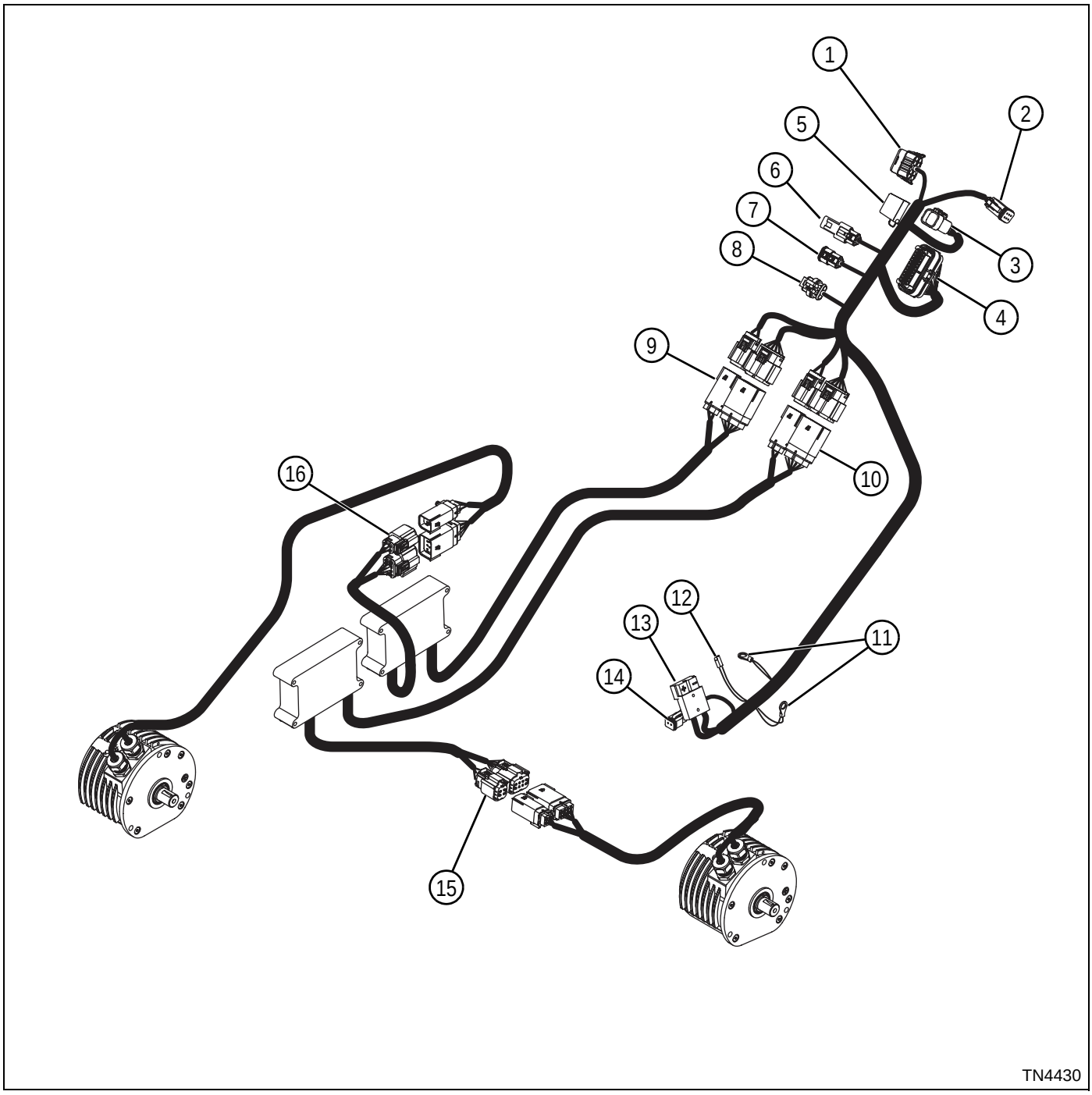

1	Mow Switch Connector (SW1)	9	Reel Motor Controller Connectors (J6 and J7)
2	Key Switch Connector (SW2)	10	Traction Motor Controller Connectors (J8 and J9)
3	Main Control Unit Connector (J1)	11	Ground Terminals (GC1 and GC2)
4	Main Control Unit Connector (J2)	12	Engine On/Off Switch Connector (J22)
5	30A Fuse (F2)	13	Battery Pack/Gen-Set Connector (J23)
6	CAN Diagnostic Connector (J14)	14	Light Kit Connector (J15)
7	Throttle Potentiometer Connector (J3)	15	Traction Motor Connectors (J12 and J13)
8	Bail Potentiometer Connector (J20)	16	Reel Motor Connectors (J10 and J11)

Figure 4-3

Electrical Schematic Component Identification

Electrical components shown in the main schematic are identified with an alphanumeric call out. All electrical components shown in the electrical schematic are listed below.

- B1—12V Battery (See Figure 4-4.)
- B2—12V Battery (See Figure 4-4.)
- B3—12V Battery (See Figure 4-4.)
- B4—12V Battery (See Figure 4-4.)
- E1—Spark Plug (See Figure 4-4.)
- F1—50A Fuse (See Figure 4-4.)
- F2—30A Fuse (See Figure 4-4.)
- M1—Reel Motor (See Figure 4-5.)
- M2—Traction Motor (See Figure 4-5.)
- R1—Throttle Potentiometer (See Figure 4-4.)
- R2—Bail Potentiometer (See Figure 4-4.)
- R3—5-Ohm Resistor (See Figure 4-4.)
- SW1—Mow Switch (See Figure 4-4.)
- SW2—Key Switch (See Figure 4-4.)
- SW3—Engine On/Off Switch (See Figure 4-4.)
- SW4—Light Switch (See Figure 4-5.)
- T1—Ignition CoIl (See Figure 4-4.)
- U1—Reel Motor Controller (See Figure 4-5.)
- U2—Traction Motor Controller (See Figure 4-5.)
- U3—1kW Generator (See Figure 4-4.)
- U4—Battery Gauge (See Figure 4-4.)
- U5—Main Control Unit (MCU) (See Figure 4-4.)

Page Intentionally Blank

Main Schematic

See Figures 4-4 and 4-5.

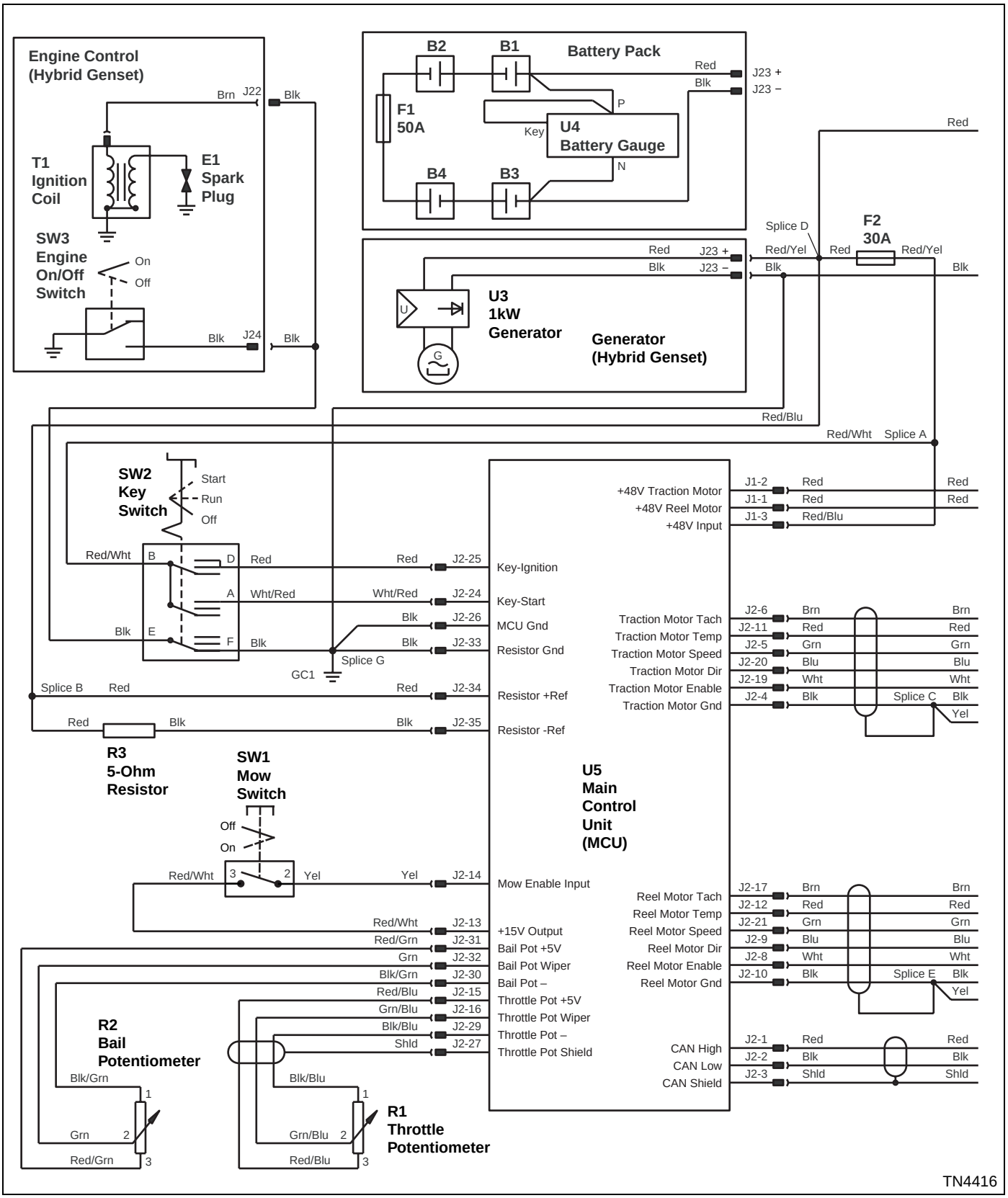

Figure 4-4

Main Schematic
Continued

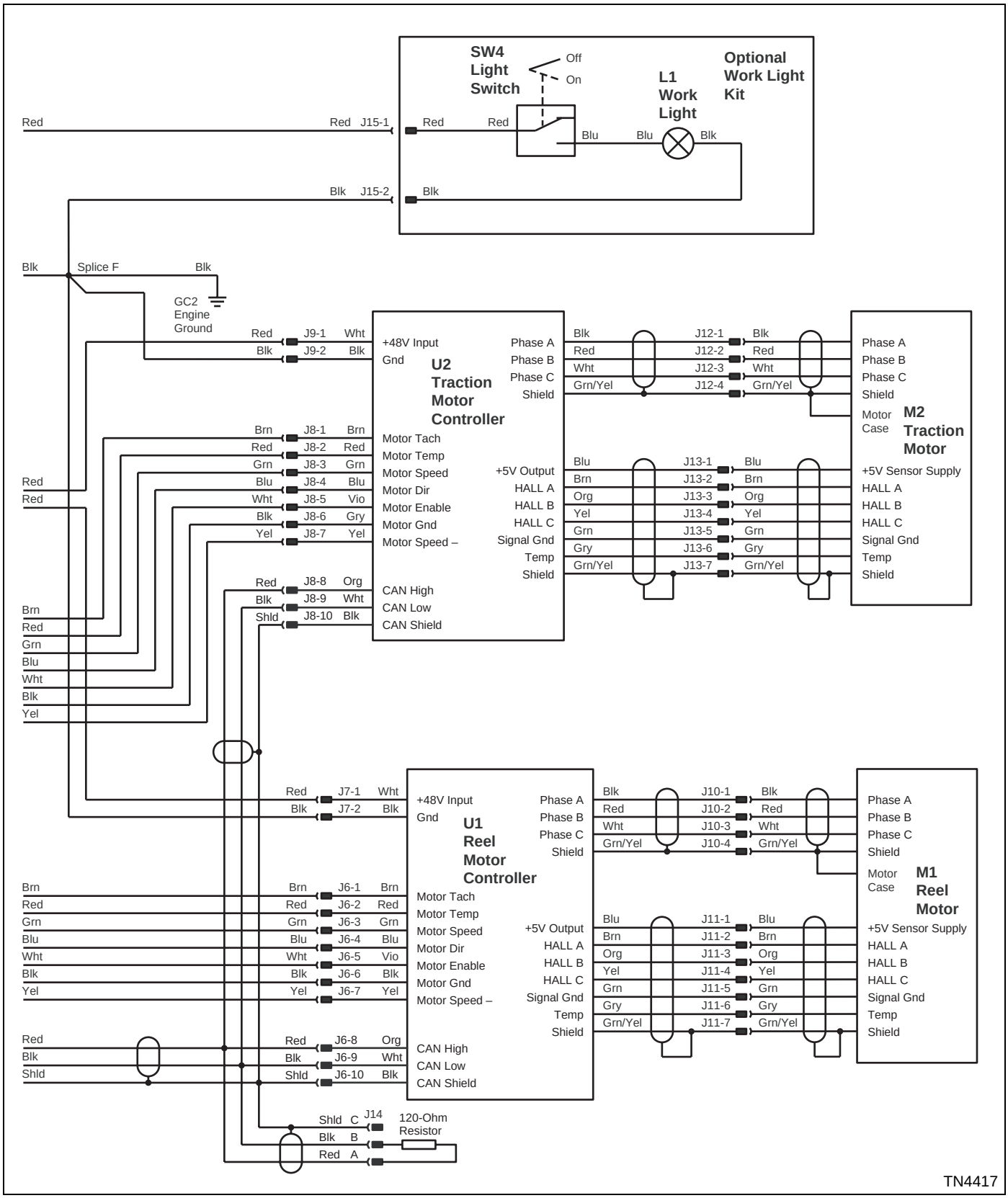

Figure 4-5

Page Intentionally Blank

Theory and Diagnostic Information

48-Volt Power Circuit—Theory of Operation

48-Volt Power Circuit Components

Battery Pack—If Equipped

The battery pack consists of four 12-VDC sealed lead acid batteries (B1–B4) wired in series. The battery pack is equipped with a battery gauge to monitor charge status. The battery pack is protected with a 50-amp fuse (F1).

Gen-Set—If Equipped

The gen-set consists of a generator with an internal voltage regulator. As the engine turns, the generator provides voltage to the voltage regulator. The voltage regulator maintains voltage at or near 48 VDC.

Key Switch

The key switch (SW2) is a three-position switch (off, run, and start), used to operate the main control unit.

Main Control Unit

The main control unit (U5) has a built-in LCD display and manages all machine functions.

48-Volt Power Circuit Operation—Battery Pack

See Figures 4-6 and 4-7.

With the key switch in the off position, voltage is available to the 30A fuse from the battery pack. From the 30A fuse, voltage is available to key switch terminal B and main control unit connector J1-3. Voltage is also available to the work light connector positive terminal.

48-Volt Power Circuit Operation—Gen-Set

See Figures 4-8 and 4-9.

With the key switch in the run position, and the engine running, voltage is available to the 30A fuse from the generator. From the 30A fuse, voltage is available to key switch terminal B and main control unit connector J1-3. Voltage is also available to the work light connector positive terminal.

Ignition Shutoff Circuit Operation—Gen-Set

See Figures 4-10 and 4-11.

With the key switch in the off position, ground is provided to the ignition coil. When the ignition coil is grounded, it is prevented from producing spark and the engine cannot operate.

48-Volt Power Circuit Schematic—Battery Pack

See Figures 4-6 and 4-7.

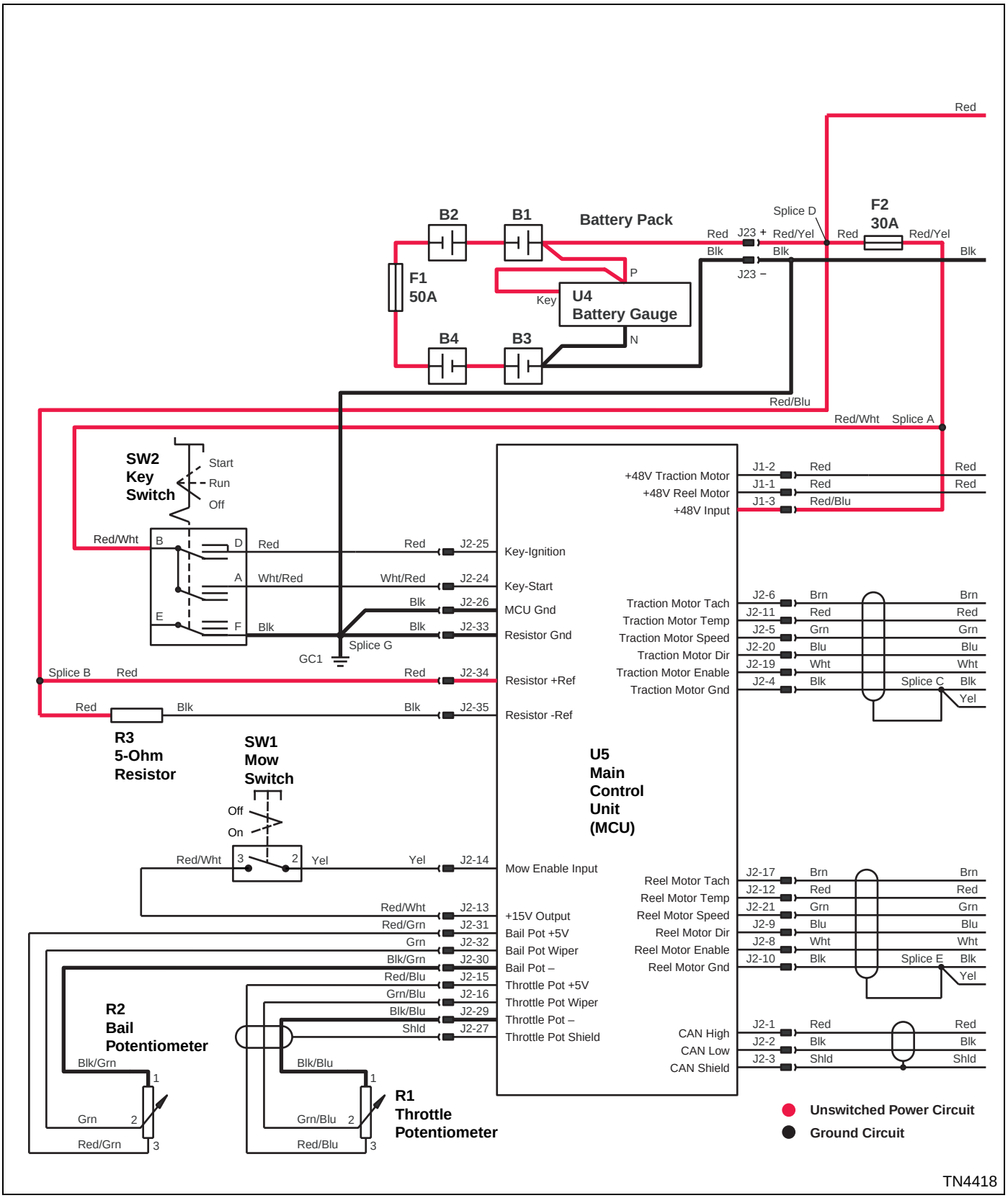

Figure 4-6

48-Volt Power Circuit Schematic—Battery Pack Continued

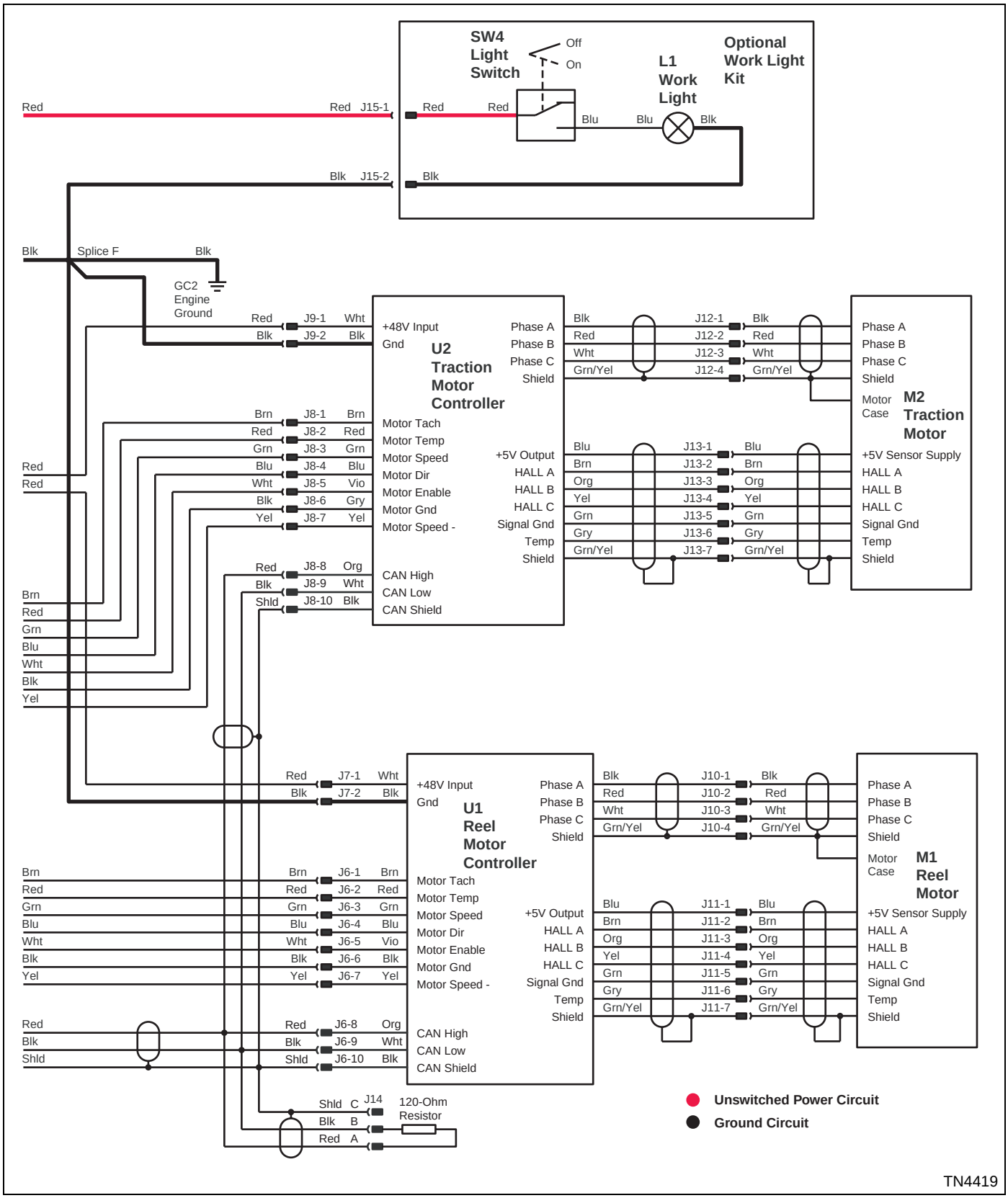

Figure 4-7

48-Volt Power Circuit Schematic—Gen-Set

See Figures 4-8 and 4-9.

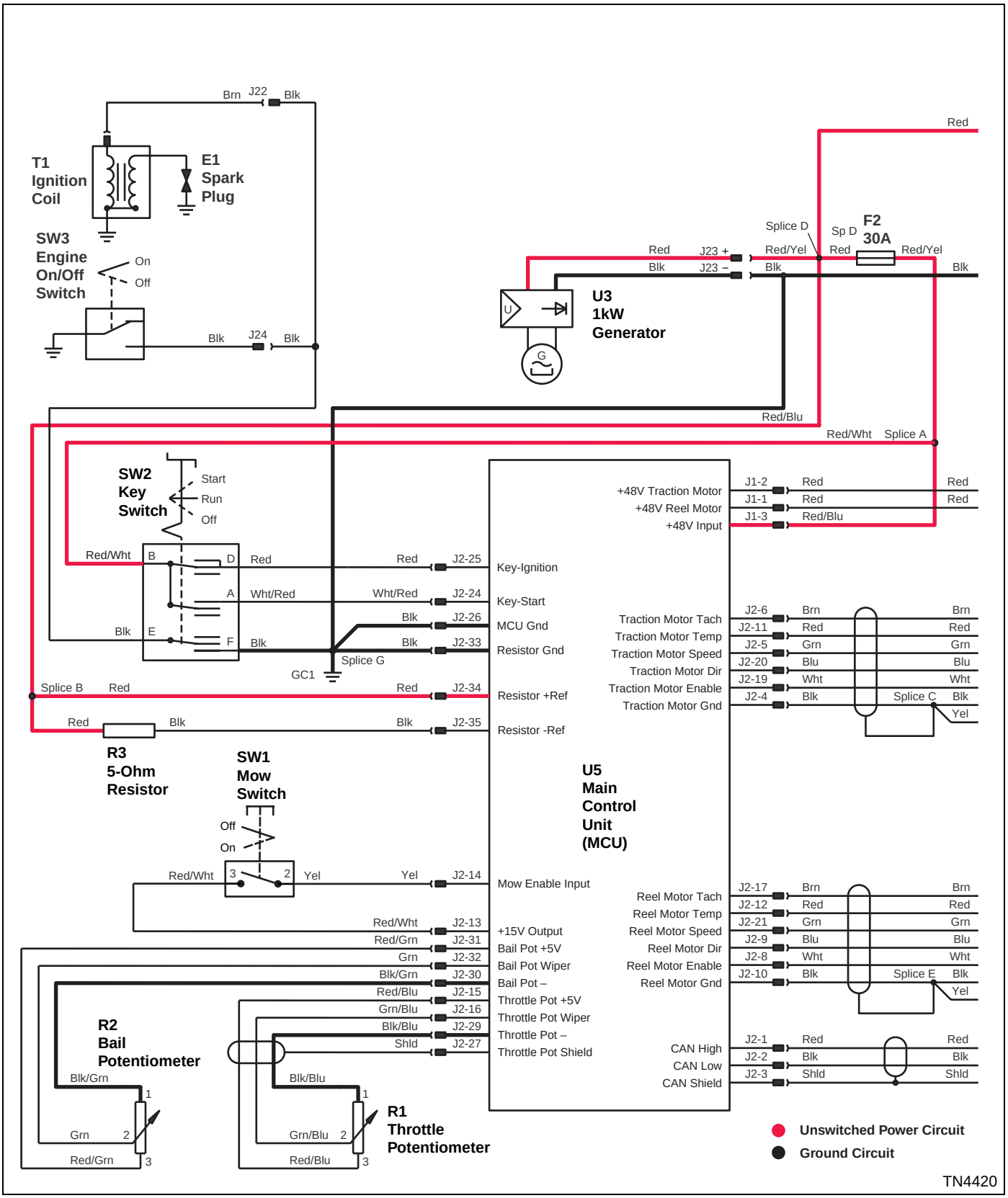

Figure 4-8

48-Volt Power Circuit Schematic—Gen-Set Continued

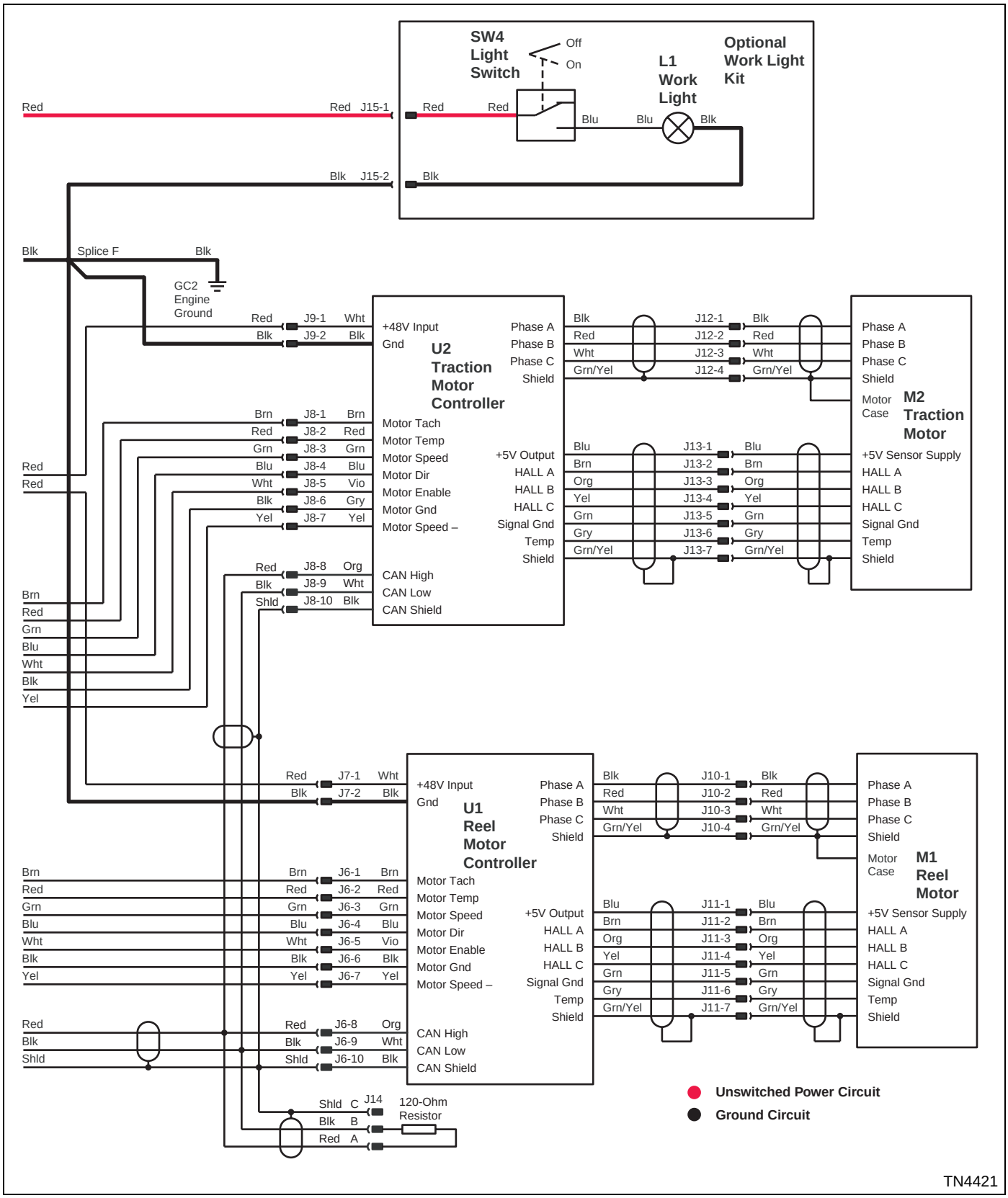

Figure 4-9

Ignition Shutoff Circuit Schematic—Gen-Set

See Figures 4-10 and 4-11.

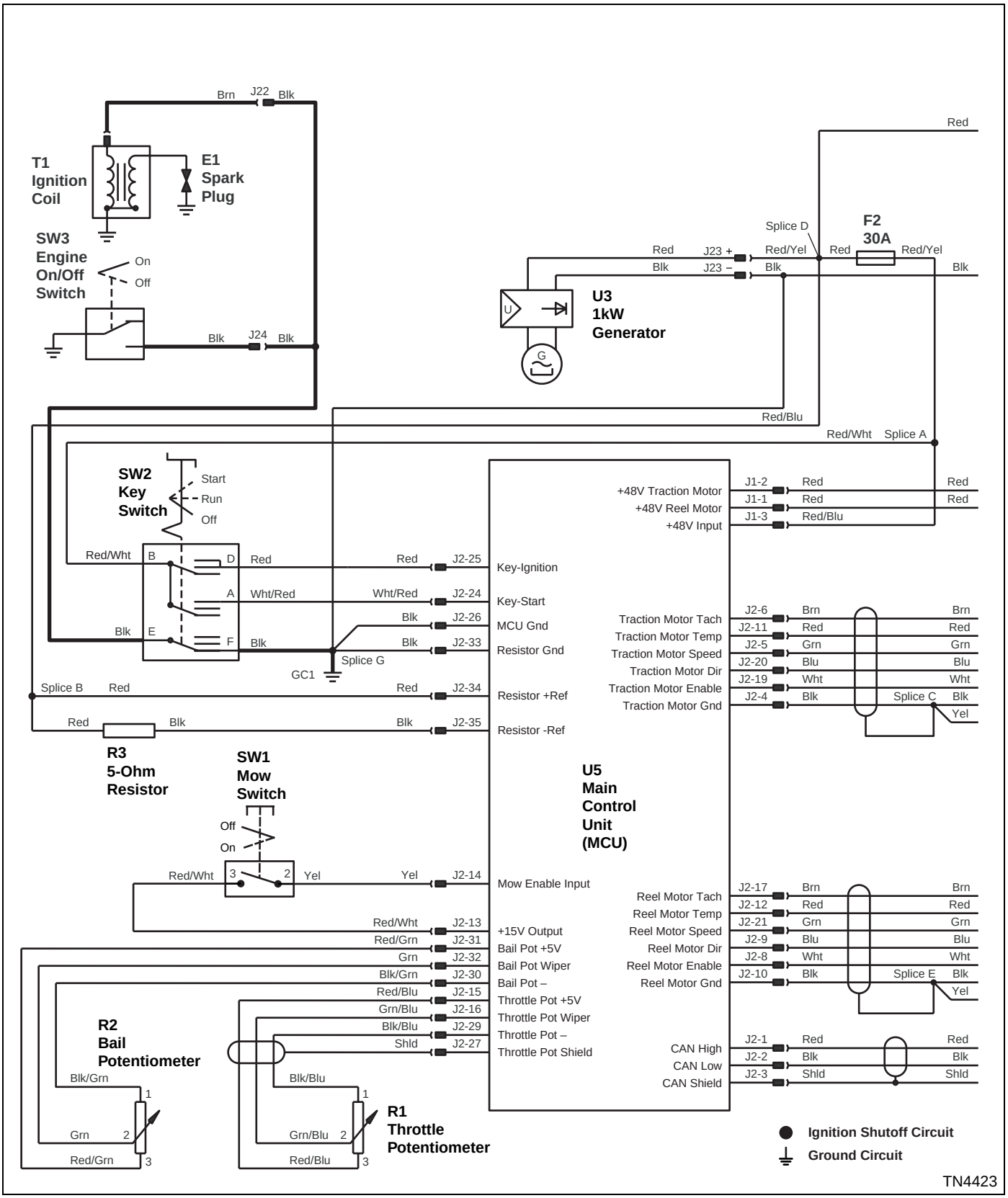

Figure 4-10

Ignition Shutoff Circuit Schematic—Gen-Set Continued

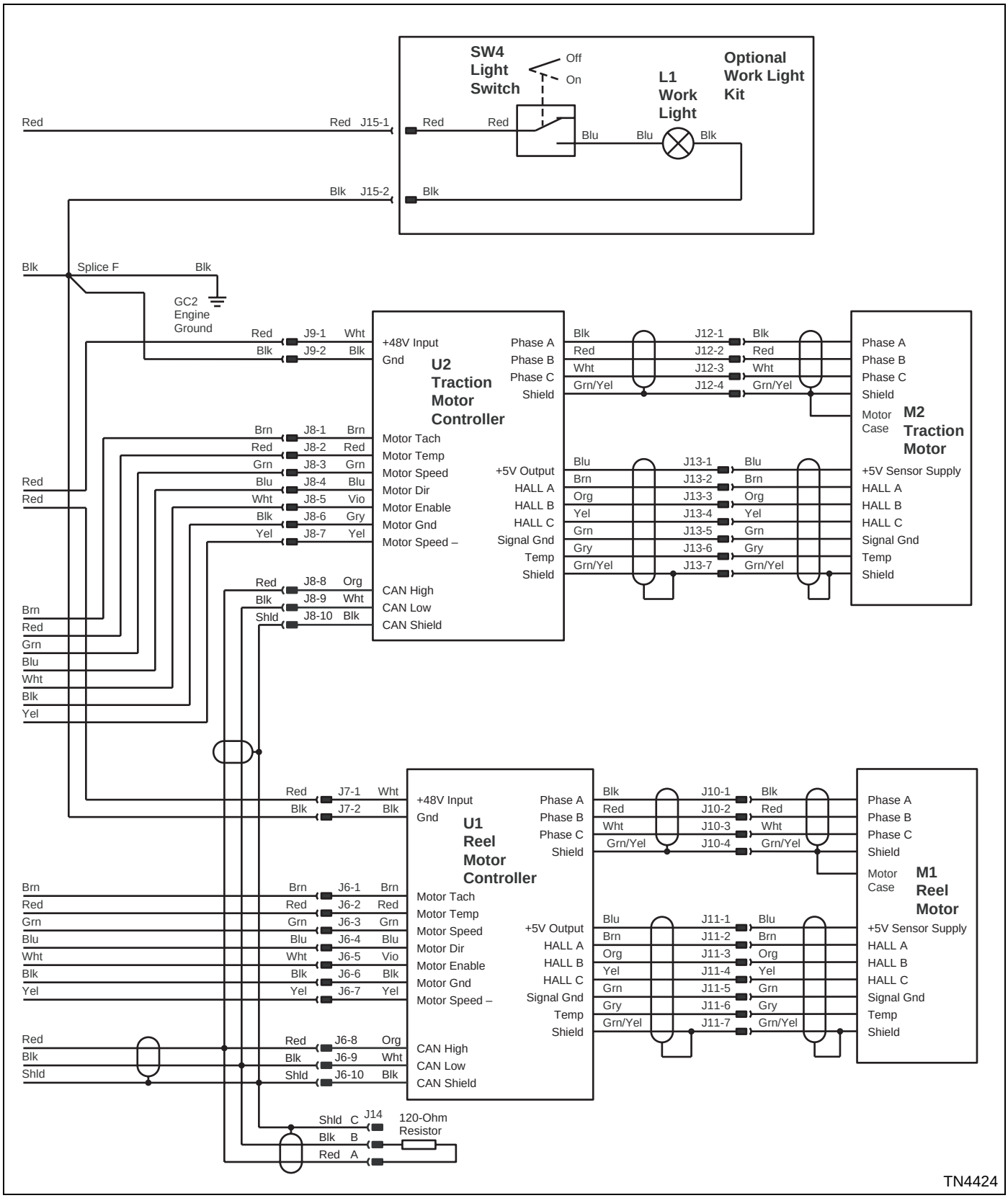

Figure 4-11

Page Intentionally Blank

Switched Power Circuit—Theory of Operation

Switched Power Circuit Components

Gen-Set—If Equipped

The gen-set consists of a generator with an internal voltage regulator. As the engine turns, the generator provides voltage to the voltage regulator. The voltage regulator maintains voltage at or near 48 VDC.

Battery Pack—If Equipped

The battery pack consists of four 12-VDC sealed lead acid batteries (B1–B4) wired in series. The battery pack is equipped with a battery gauge to monitor charge status. The battery pack is protected with a 50-amp fuse (F1).

Key Switch

The key switch (S2) is a three-position switch (off, run, and start), used to operate the main control unit.

Main Control Unit

The main control unit (U5) has a built-in LCD display and manages all machine functions.

The bail potentiometer, throttle potentiometer, and mow switch provide input signals to the main control unit (MCU). The MCU uses these input signals to control the reel and traction controllers.

Switched Power Circuit Operation

See Figures 4-12 and 4-13.

Voltage is available to the 30A fuse from the battery pack or gen-set (engine running). From the 30A fuse, voltage is available to key switch terminal B and main control unit connector J1-3.

When the key switch is moved to the run position, voltage is provided from key switch terminal D to main control unit connector J2-25. With voltage provided to connector J2-25, the ignition input becomes active.

When the key switch is moved to the start position, voltage is provided from key switch terminal A to main control unit connector J2-24. With voltage provided to connector J2-24, the start input becomes active. With the ignition and start inputs active, the main control unit powers up.

With the main control unit powered up, the main control unit provides 48 volts to the reel and traction controllers.

The main control unit also provides 15 volts to the mow switch and 5 volts to the bail and throttle potentiometers.

Switched Power Circuit Schematic

See Figures 4-12 and 4-13.

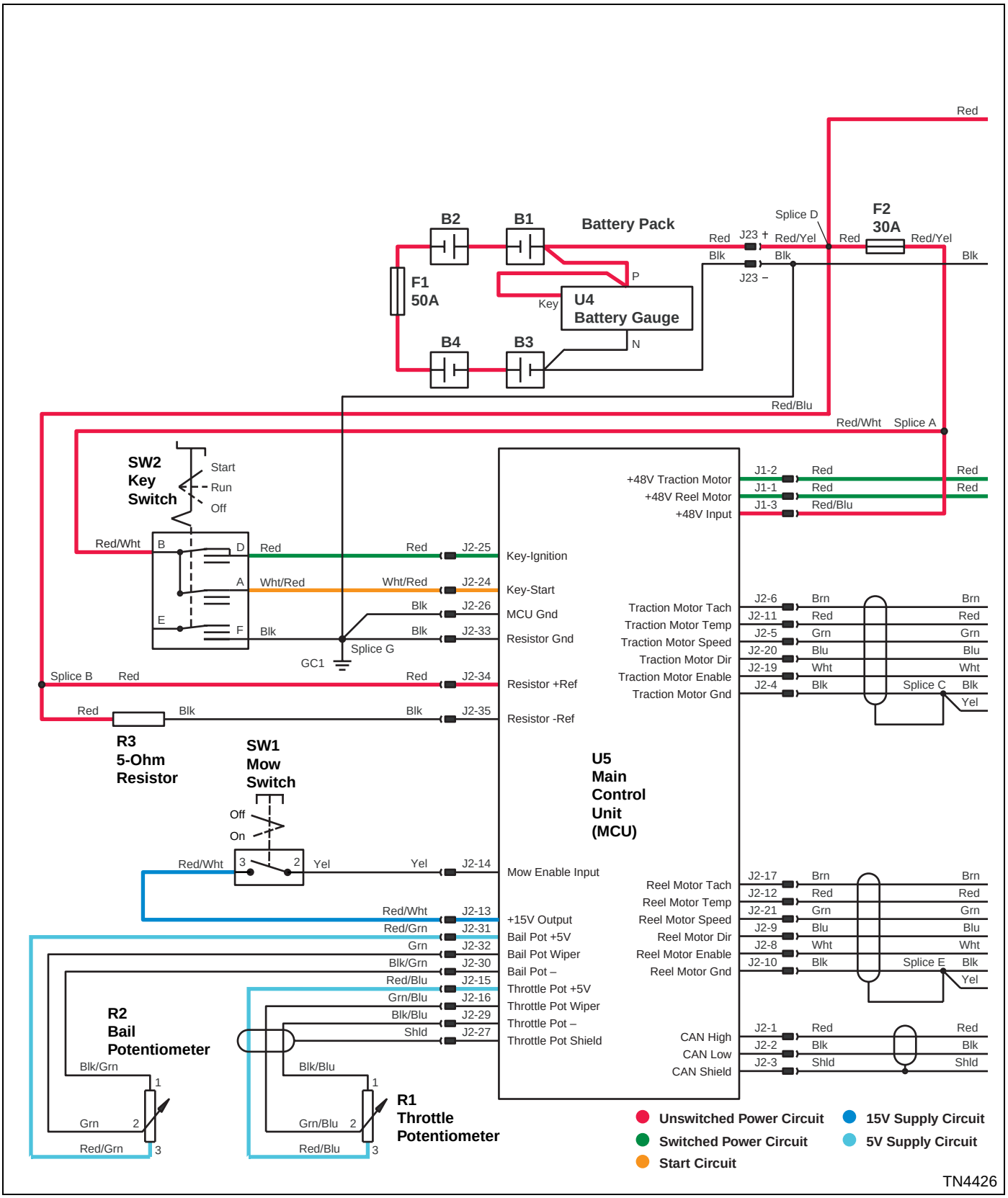

Figure 4-12

Switched Power Circuit Schematic Continued

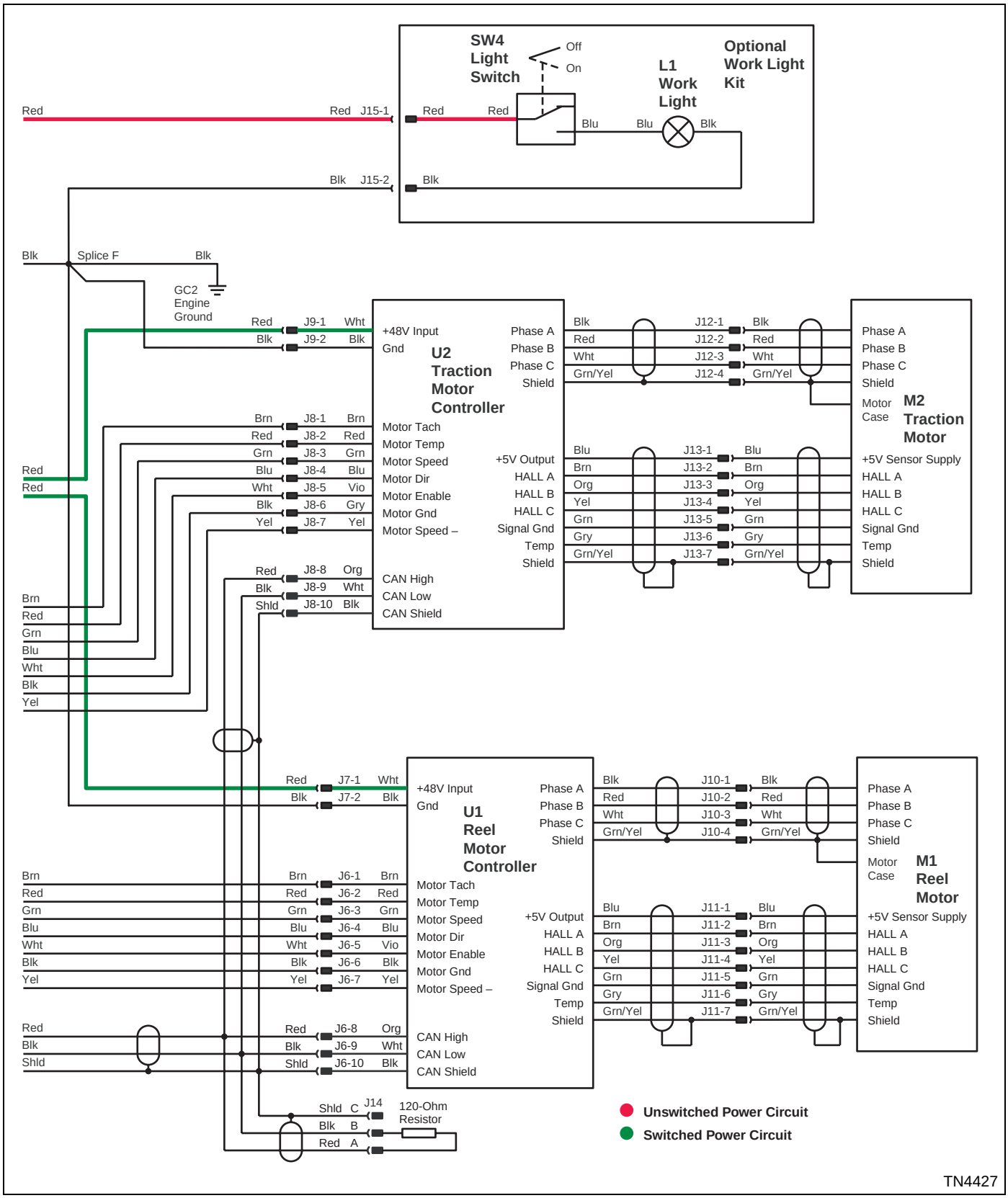

Figure 4-13

Page Intentionally Blank

Traction Circuit—Theory of Operation

Traction Circuit Components

Main Control Unit

The main control unit (MCU) manages all machine functions based on user input and programmed settings.

Throttle Potentiometer

The throttle potentiometer (R1) is supplied 5 VDC from MCU.

The throttle potentiometer provides a 0–5 VDC input voltage to the MCU terminal J2-16.

Bail Potentiometer

The bail potentiometer (R2) is supplied 5 VDC from MCU.

The bail potentiometer provides a 0–5 VDC input voltage to the MCU terminal J2-32.

Traction Motor Controller Unit

The traction motor controller (U2) is supplied 48 VDC from the MCU.

The traction motor controller provides an AC output and 5 VDC output to the traction motor. The traction motor controller manages motor speed based on input from the MCU.

Traction Motor

Traction motor (M2) is supplied AC current from the traction motor controller.

The traction motor hall effect sensors provides the traction motor controller an input voltage to communicate motor speed.

The traction motor maintains speed via regenerative braking.

When the traction motor is slowed, energy is created. The traction motor controller rectifies this energy and places it back on the 48 VDC power circuit.

Traction Circuit Operation

See Figures 4-14 and 4-15.

Main control unit (MCU) terminal J1-2 provides +48 VDC to traction motor controller terminal J9-1.

MCU terminal J2-15 provides +5 VDC to throttle potentiometer terminal 3.

When the throttle potentiometer is adjusted, a 0–5 VDC reference voltage is provided from throttle potentiometer terminal 2 to the MCU speed input terminal J2-16.

MCU terminal J2-31 provides +5 VDC to bail potentiometer terminal 3.

When the bail potentiometer is adjusted, a 0–5 VDC reference voltage is provided from bail potentiometer terminal 2 to the MCU bail pot Input terminal J2-32.

The traction motor controller (U2) provides +5 volts and a signal ground to the traction motor (M2), powering the motor hall effect and temp sensors.

The hall A, B, and C sensor output terminals provide a signal to the traction motor controller hall A, B, and C input terminals through the traction motor terminals J13-2, J13-3, and J13-4.

The traction motor controller, motor tach output terminal J8-1 provides an AC signal to MCU traction motor tach input terminal J2-6. The AC signal is used to indicate motor speed. The tach signal is based on the traction motor hall sensor signals provided to the traction motor controller.

The traction motor temp sensor provides a 0–5 VDC reference voltage to the traction motor controller temp input terminal J13-6. The traction motor controller, motor temp output terminal J8-2 provides the temperature value to the MCU traction motor temp terminal J2-11.

The MCU provides a ground (low) signal output from traction motor enable terminal J2-19 to traction motor controller terminal J8-5. This ground (low) enables motor operation.

The MCU provides an open/high or approximately 8 VDC from the traction motor direction terminal J2-20 to traction motor controller terminal J8-4. The 8 VDC signal turns the motor shaft in the CCW direction for forward travel.

The traction motor controller provides three-phase AC voltage to the traction motor through terminals phase A, B, and C.

The MCU traction motor speed output terminal J2-5 provides a 0–5VDC reference voltage to the traction motor controller motor speed input terminal J8-3. Depending on the value of the signal provided from the MCU, the traction motor controller will operate the traction motor at the speed requested.

The MCU will display the traction motor controller fault icon on the LCD display when a problem is detected in the traction motor controller. The traction motor will not operate until the problem is resolved.

The MCU will also display the traction motor fault icon on the LCD display when a traction motor short circuit is detected or the traction motor current draw exceeds a constant 25 amps. The traction motor will not operate until the problem is resolved.

Traction Circuit Schematic

See Figures 4-14 and 4-15.

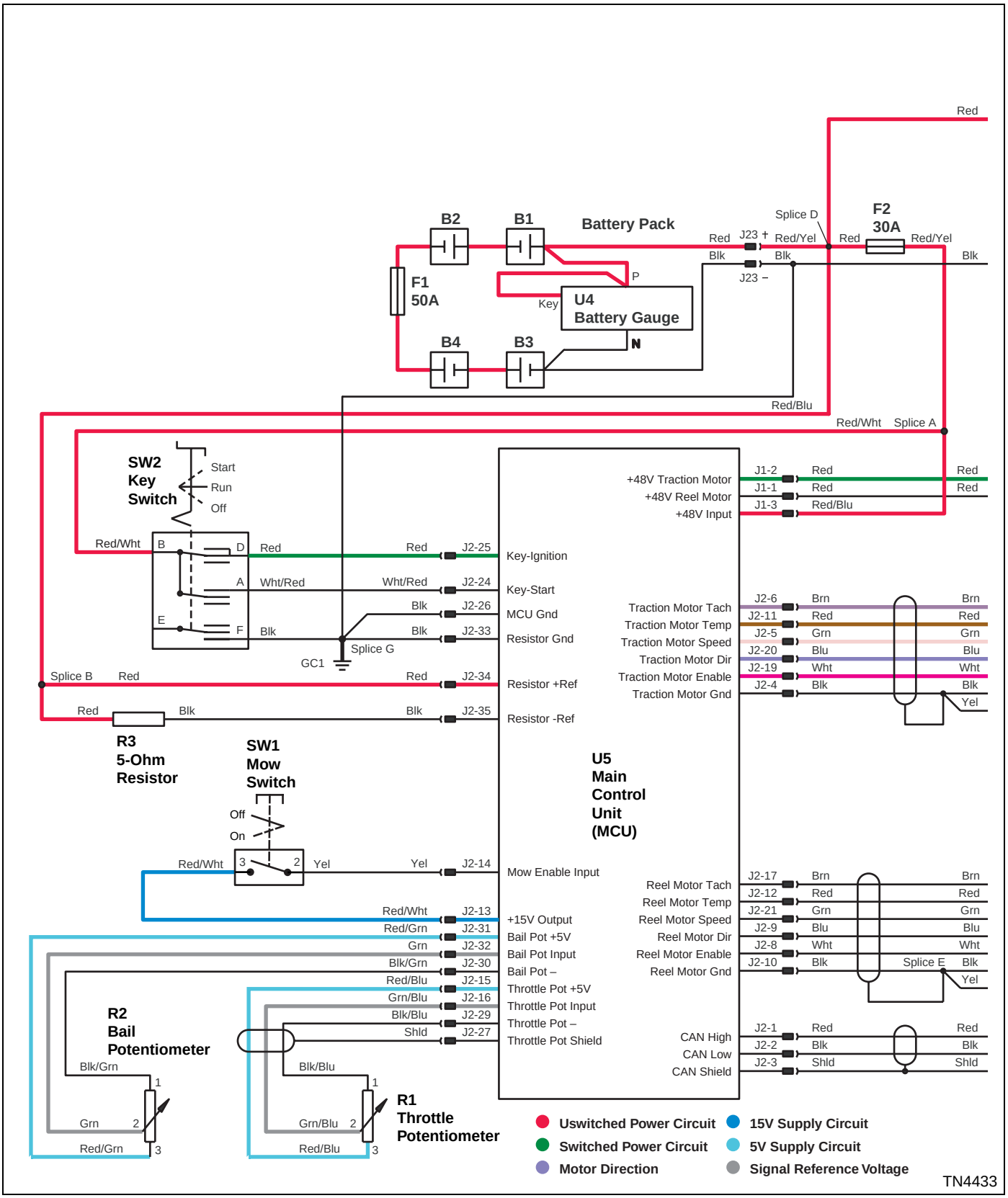

Figure 4-14

Traction Circuit Schematic Continued

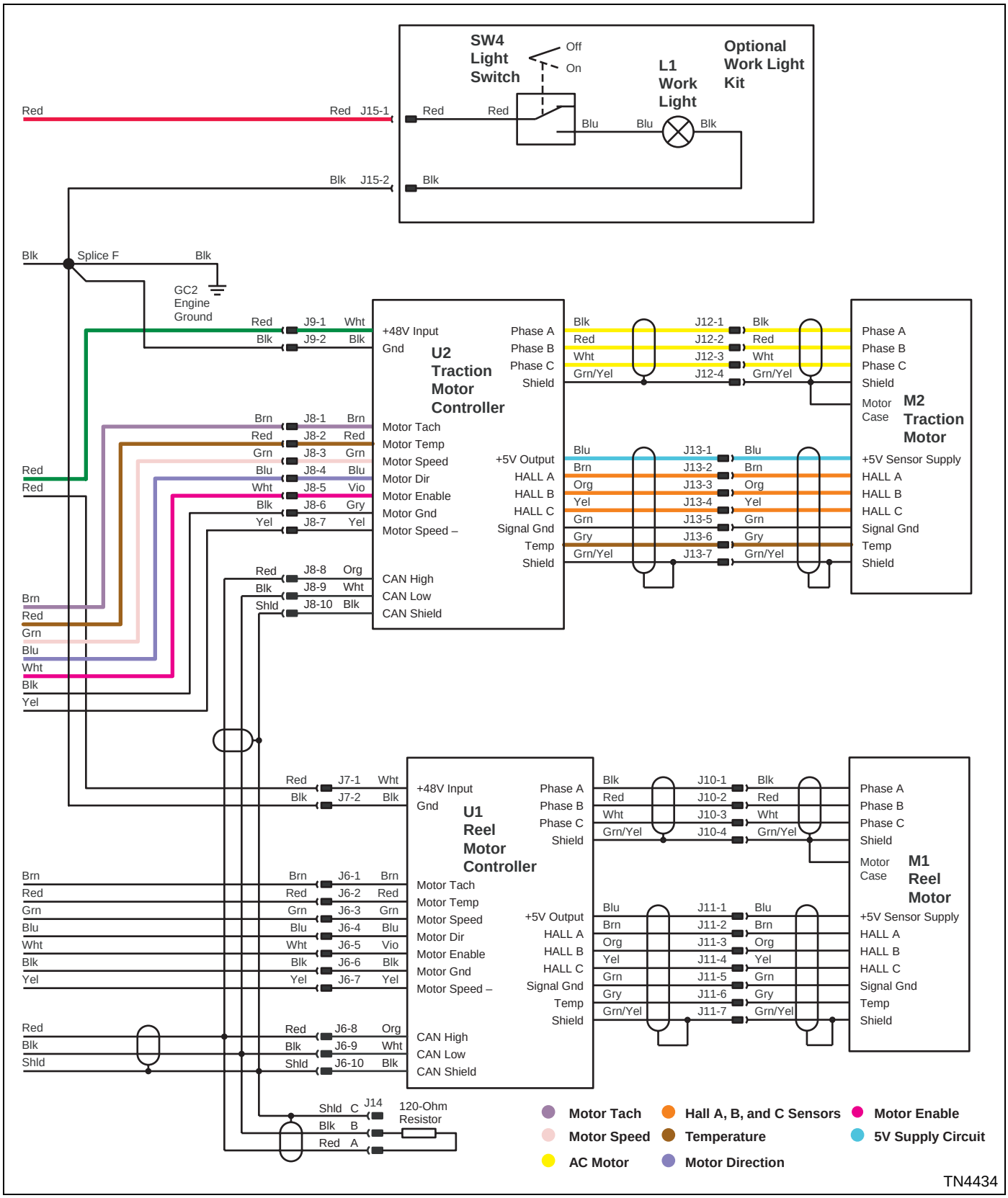

Figure 4-15

Page Intentionally Blank

Reel Motor Circuit—Theory of Operation

Reel Motor Circuit Components

Main Control Unit

The main control unit (MCU) manages all machine functions based on user input and programmed settings.

Bail Potentiometer

The bail potentiometer (R2) is supplied 5 VDC from MCU.

The bail potentiometer provides a 0–5 VDC input voltage to the MCU terminal J2-32.

Mow Switch

The mow switch (SW1) is supplied 15 VDC from MCU.

When the mow switch closed, a 15 VDC input voltage is provided to MCU terminal J2-13.

Reel Motor Controller Unit

The reel motor controller (U1) is supplied 48 VDC from the MCU.

The reel motor controller provides an AC output and 5 VDC output to the reel motor. The reel motor controller manages motor speed based on input from the MCU.

Reel Motor

Reel motor (M1) is supplied AC current from the reel motor controller.

The reel motor hall effect sensors provides the reel motor controller an input voltage to communicate motor speed.

Reel Motor Circuit Operation

See Figures 4-16 and 4-17.

Main control unit (MCU) terminal J1-1 provides +48 VDC to reel motor controller terminal J7-1.

MCU terminal J2-31 provides +5 VDC to bail potentiometer terminal 3.

When the bail potentiometer is adjusted, a 0–5 VDC reference voltage is provided from bail potentiometer terminal 2 to the MCU bail pot input terminal J2-32.

The reel motor controller (U1) provides +5 volts and a signal ground to the traction motor (M2), powering the motor hall effect and temp sensors.

The hall A, B, and C sensor output terminals provide a signal to the reel motor controller hall A, B, and C input terminals through the traction motor terminals J11-2, J11-3, and J11-4.

The reel motor controller, motor tach output terminal J6-1 provides an AC signal to MCU reel motor tach input terminal J2-17. The AC signal is used to indicate motor speed. The tach signal is based on the reel motor hall sensor signals provided to the reel motor controller.

The reel motor temp sensor provides a 0–5 VDC reference voltage to the reel motor controller temp input terminal J1-6. The reel motor controller, motor temp output terminal J6-2 provides the temperature value to the MCU reel motor temp terminal J2-12.

The MCU provides a ground (low) signal output from reel motor enable terminal J2-8 to reel motor controller terminal J6-5. This ground (low) enables motor operation.

The MCU provides an open/high or approximately 8 VDC from the reel motor direction terminal J2-9 to reel motor controller terminal J6-4. The 8 VDC signal turns the motor in the CCW direction.

The reel motor controller provides three-phase AC voltage to the traction motor through terminals phase A, B, and C.

The MCU reel motor speed output terminal J2-21 provides a 0–5VDC reference voltage to the reel motor controller motor speed input terminal J6-3. Depending on the value of the signal provided from the MCU, the reel motor controller will operate the reel motor at the speed requested.

The MCU will display the reel motor controller fault icon on the LCD display when a problem is detected in the reel motor controller. The reel motor will not operate until the problem is resolved.

The MCU will also display the reel motor fault icon on the LCD display when a reel motor short circuit is detected or the reel motor current draw exceeds a constant 25 amps. The reel motor will not operate until the problem is resolved.

Reel Motor Circuit Schematic

See Figures 4-16 and4-17.

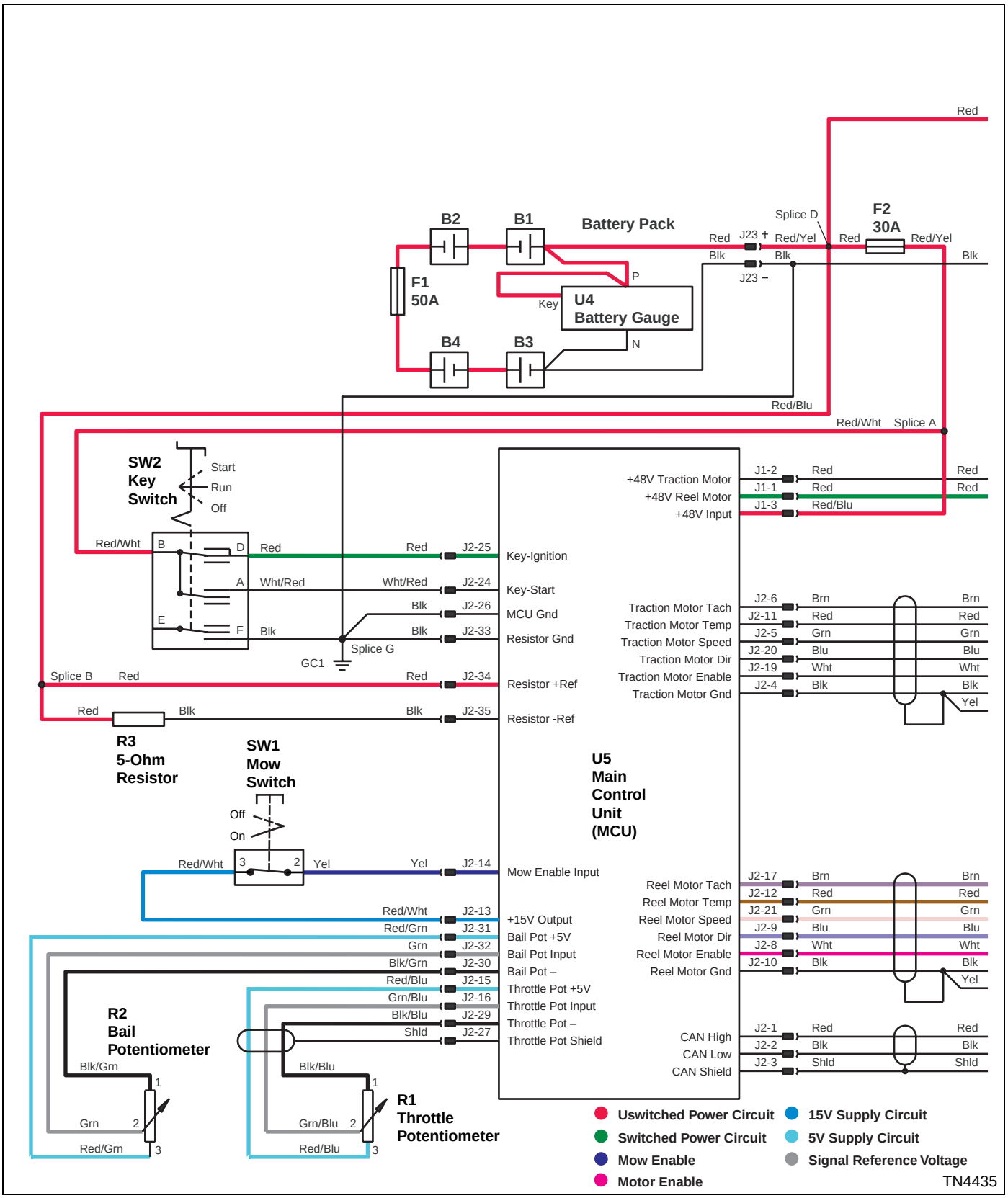

Figure 4-16

Reel Motor Circuit Schematic Continued

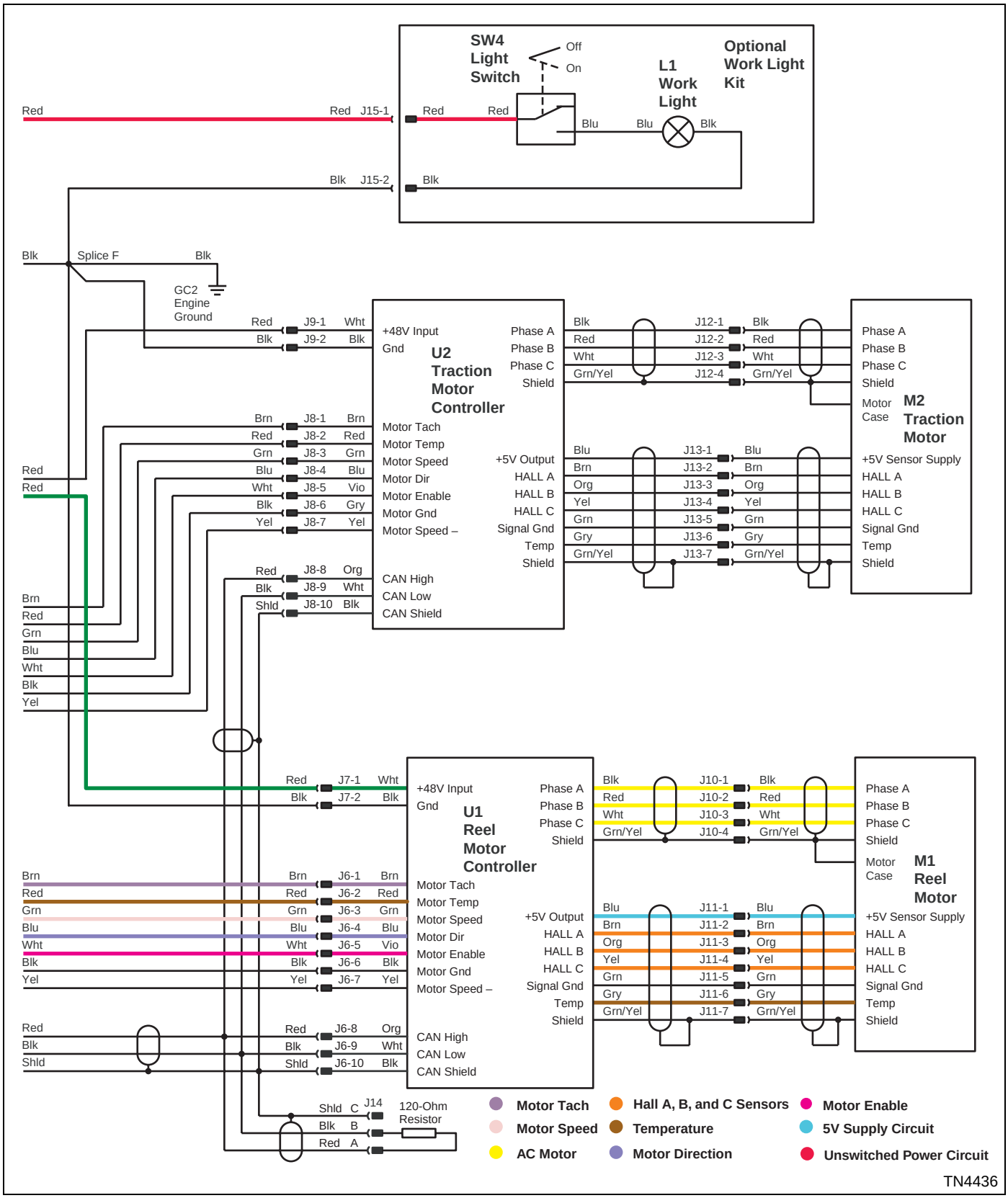

Figure 4-17

Troubleshooting

Symptom: Machine will not power up.

Probable Cause	Remedy
Faulty battery pack.	Test battery pack. (See “Battery Pack Test” on page 4-45.)
Faulty battery pack fuse.	Test fuse. (See “Battery Pack Fuse Test” on page 4-50.)
Faulty generator.	Test generator. (See “Gen-Set Output Test” on page 4-46.)
Faulty engine on/off switch	Test engine on/off Switch. (See “Engine On/Off Switch” on page 4-47.)
Faulty 30A fuse.	Test 30A fuse. (See “30A Fuse Test” on page 4-50.)
Faulty power circuit.	Measure voltage between battery pack positive terminal and ground. Measure voltage between main control unit connector J1-3 and ground. Voltage must be approximately 48 VDC.
Open ground circuit.	Measure continuity between battery pack negative terminal and main control unit connectors J2-26 and J2-33. Continuity must be indicated.
Faulty key switch.	Test key switch. (See “Key Switch Test” on page 4-48.)
Faulty key switch power circuit.	Measure voltage between key switch terminal B and ground. Voltage must be approximately 48 VDC.
Faulty switch signal circuit.	With key switch in start position, measure voltage between key switch terminal A and ground. With key switch in the start position, measure voltage between main control unit connector J2-24 and ground. Voltage must be approximately 48 VDC.
Faulty main control unit.	Substitute main control unit with a known good main control unit.
Faulty main control unit power circuit.	Measure voltage between main control unit connector J1-3 and ground. Voltage must be approximately 48 VDC.
Open main control unit ground circuit.	Measure continuity between battery pack negative terminal and main control unit connectors J2-26 and J2-33. Continuity must be indicated.

Symptom: Traction motor will not engage.

Probable Cause	Remedy
Faulty traction motor connections.	Check connections (moisture, loose or corroded pins, etc.) and repair as necessary.
Faulty bail potentiometer.	Test bail potentiometer. (See “Bail Potentiometer Test” on page 4-55.)
Faulty bail potentiometer power circuit.	Measure voltage between main control unit connector J2-31 and ground. Measure voltage between bail potentiometer terminal 1 and ground. Voltage must be approximately 5 VDC.
Open bail potentiometer ground circuit.	Measure continuity between main control unit connector J2-30 and bail potentiometer terminal 1. Continuity must be indicated.
Faulty bail potentiometer input circuit.	Measure voltage between main control unit connector J2-32 and ground. Measure voltage between bail potentiometer terminal 2 and ground. Voltage must range between 0 and 5 VDC.
Faulty throttle potentiometer.	Test throttle potentiometer. (See “Throttle Potentiometer Test” on page 4-54.)
Faulty throttle potentiometer power circuit.	Measure voltage between main control unit connector J2-15 and ground. Measure voltage between throttle potentiometer terminal 3 and ground. Voltage must be approximately 5 VDC.
Open throttle potentiometer ground circuit.	Measure continuity between main control unit connector J2-29 and throttle potentiometer terminal 1. Continuity must be indicated.
Faulty throttle potentiometer input circuit.	Measure voltage between main control unit connector J2-16 and ground. Measure voltage between throttle potentiometer terminal 2 and ground. Voltage must range between 0 and 5 VDC.
Faulty traction motor.	Test traction motor. (See “Traction Motor Test” on page 4-52.)
Faulty traction motor controller.	Substitute traction motor controller with a known good controller.
Faulty main control unit.	Substitute main control unit with a known good controller.

Symptom: Reel motor will not engage.

Probable Cause	Remedy
Faulty reel motor connections.	Check connections (moisture, loose or corroded pins, etc.) and repair as necessary.
Faulty mow switch.	Test mow switch. (See “Mow Switch Test” on page 4-49.)
Faulty mow switch power circuit.	Measure voltage between main control unit connector J2-13 and ground. Measure voltage between mow switch terminal 3 and ground. Voltage must range between 11.25 and 15 VDC.
Faulty mow switch input circuit.	Measure continuity between main control unit connector J2-14 and mow switch terminal 2. Continuity must be indicated.
Faulty bail potentiometer.	Test bail potentiometer. (See “Bail Potentiometer Test” on page 4-55.)
Faulty bail potentiometer power circuit.	Measure voltage between main control unit connector J2-31 and ground. Measure voltage between bail potentiometer terminal 1 and ground. Voltage must be approximately 5 VDC.
Open bail potentiometer ground circuit.	Measure continuity between main control unit connector J2-30 and bail potentiometer terminal 1. Continuity must be indicated.
Faulty bail potentiometer input circuit.	Measure voltage between main control unit connector J2-32 and ground. Measure voltage between bail potentiometer terminal 2 and ground. Voltage must range between 0 and 5 VDC.
Faulty reel motor.	Test reel motor. (See “Reel Motor Test” on page 4-53.)
Faulty reel motor controller.	Substitute reel motor controller with a known good controller.
Faulty main control unit.	Substitute main control unit with a known good controller.
Faulty throttle potentiometer.	Test throttle potentiometer. (See “Throttle Potentiometer Test” on page 4-54.)
Faulty throttle potentiometer power circuit.	Measure voltage between main control unit connector J2-15 and ground. Measure voltage between throttle potentiometer terminal 3 and ground. Voltage must be approximately 5 VDC.
Open throttle potentiometer ground circuit.	Measure continuity between main control unit connector J2-29 and throttle potentiometer terminal 1. Continuity must be indicated.
Faulty throttle potentiometer input circuit.	Measure voltage between main control unit connector J2-16 and ground. Measure voltage between throttle potentiometer terminal 2 and ground. Voltage must range between 0 and 5 VDC.

LCD Display—Modes

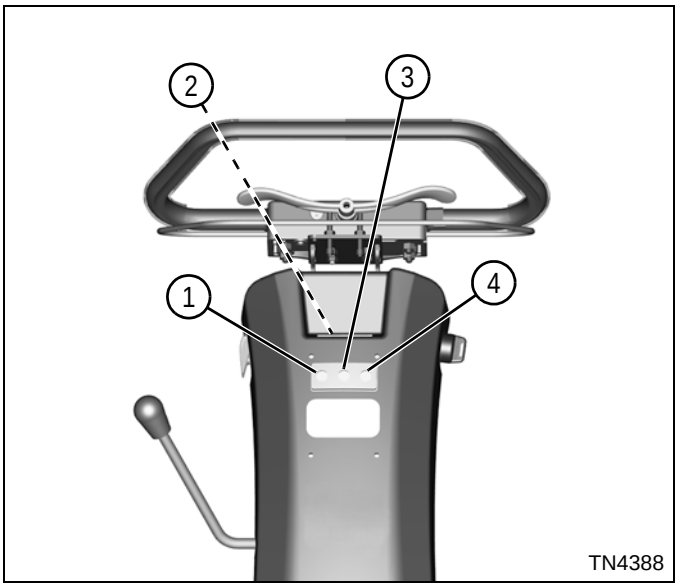

Figure 4-18

The LCD display (2) shows machine values for the operation of the Eclipse. The orange buttons (1 and 4) are used to toggle between display settings, or to increase or decrease setting values. The black button (3) is used to select, reset, or navigate within values.

The LCD displays current functional values for the operation of the Eclipse mower and sounds one of three types of audible alerts. The LCD operates in one of two modes, Operator Mode (Default) and Maintenance Mode. Use of Maintenance Mode requires a four digit personal identification number (PIN). The Maintenance Mode PIN is 6789.

Audible Alerts

The audible alerts indicate one of three conditions detected by the LCD display, and a corresponding message would show on the display. A solid tone indicates low system voltage. A fast beeping (2 per second) alert indicates an over voltage condition. A slow beeping (1 every 3 seconds) alert indicates mower is in backlap mode.

Alert Displays

In addition to the standard displays for each mode, six displays are used to alert the operator of a problem that needs to be corrected.

WARNING

To prevent personal injury, release OPC bail, disengage reel motor, move key switch to the off position, and disconnect battery pack connector before checking for obstructions in reel or traction motor systems.

Low Voltage

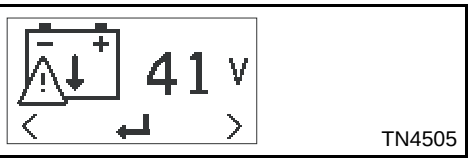

Battery Pack Models: A low-battery display screen is shown, and an audible alarm will sound when system voltage drops below 42 VDC. Press the black button to silence the audible alarm. The reel motor will not operate with system voltage below 42.0 VDC.

Check battery pack; charge or replace as needed. (See “Battery Pack” on page 4-56.)

Gen-Set Models: The same display and audible alarm will be used to indicate low voltage output from the gen-set. Press the black button to silence the audible alarm. The reel motor will not operate with system voltage below 38.0 VDC.

Test gen-set output. (See “Gen-Set Output Test” on page 4-46.)

Overvoltage/Check Voltage

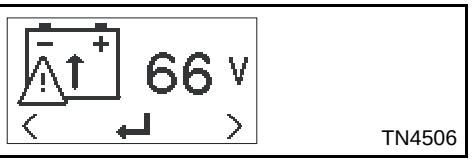

An overvoltage/check voltage display screen is shown, and an audible alarm will sound when system voltage reaches 66 VDC. Press the black button to silence the alarm. The controller will shut down after 60 seconds if the overvoltage condition remains uncorrected.

Test gen-set output. (See “Gen-Set Output Test” on page 4-46.)

Traction Motor Controller Fault

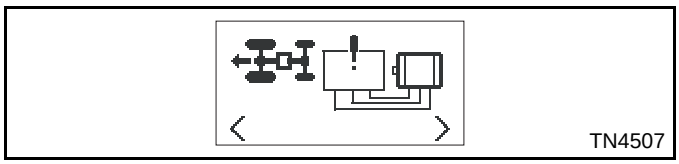

A traction motor controller fault screen will be displayed if the traction circuit exceeds 30 amps for more than one second.

A traction motor controller fault will also be displayed if the traction motor circuit is shorted to ground.

Substitute traction motor controller with a known good traction motor controller; repair or replace as needed. (See “Reel Control Unit” on page 4-67.)

Traction Motor Fault

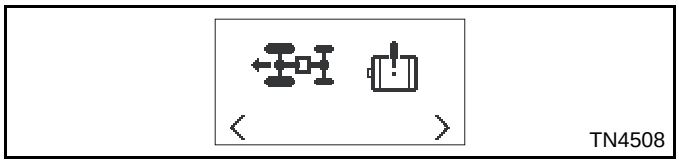

A traction motor fault screen will be displayed if the traction motor exceeds 30 amps for more than one second.

A traction motor fault will also be displayed if the traction motor circuit is shorted to ground.

Check traction motor connections; repair or replace as needed. (See “Traction Motor” on page 4-63.)

Reel Motor Controller Fault

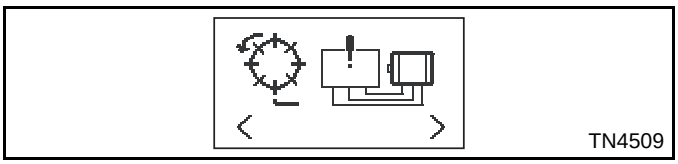

A reel motor controller fault screen will be displayed if reel circuit current draw exceeds 30 amps for more than one second.

A reel motor controller fault will also be displayed if the reel motor circuit is shorted to ground.

Substitute reel motor controller with a known good reel motor controller; repair or replace as needed. (See “Reel Control Unit” on page 4-67.)

Reel Motor Fault

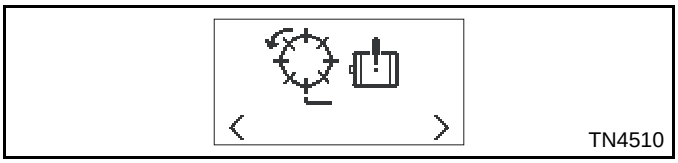

A reel motor fault screen will be displayed if reel motor current draw exceeds 30 amps for more than one second.

A reel motor fault will also be displayed if the reel motor circuit is shorted to ground.

Check reel motor connections; repair or replace as needed. (See “Reel Motor” on page 4-62.)

Operator Mode

See Figure 4-19.

Operator Mode is used by the operator for system voltage information, travel speed, FOC setting, reel speed, and total hours on mower. Press the orange buttons on the front handle cover to toggle between the different displays. Operator Mode is view only; only screen illumination can be changed.

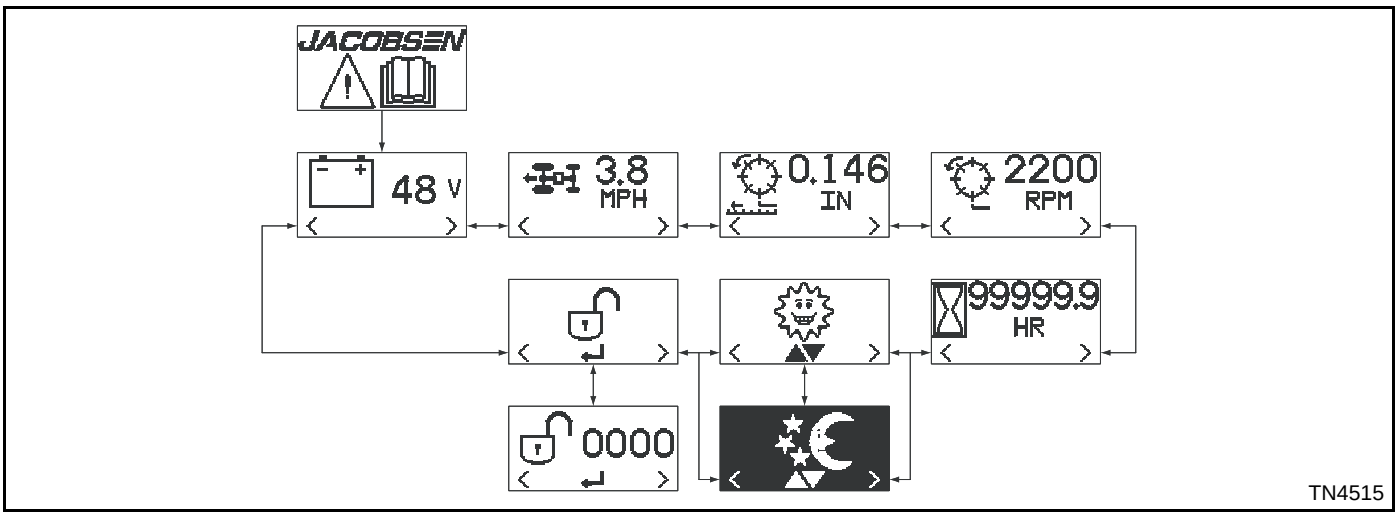

Figure 4-19

Start-Up Screen

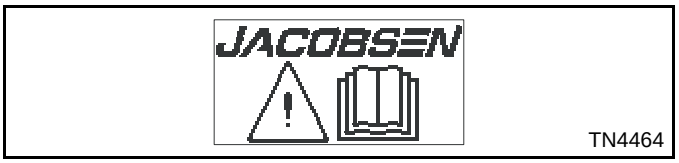

Displays for up to five seconds when system is started.

System Voltage

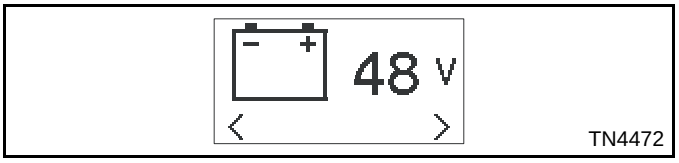

Displays system voltage. Screen will be replaced with alert screen when system voltage drops below 38 volts for gen-set models or 42 volts for battery pack models or if voltage rises above 66 volts.

Travel Speed

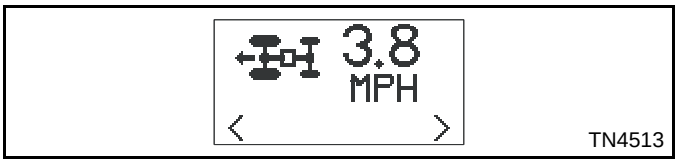

Displays the current ground speed of the machine.

FOC Setting

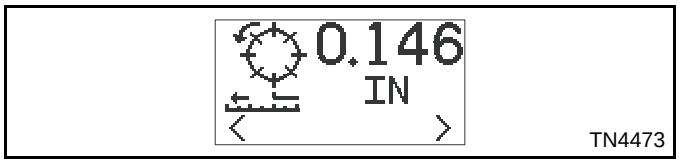

Displays FOC (Frequency of Clip) setting. When FOC is set to 0, reel will operate at the fixed reel speed.

Fixed Reel Speed

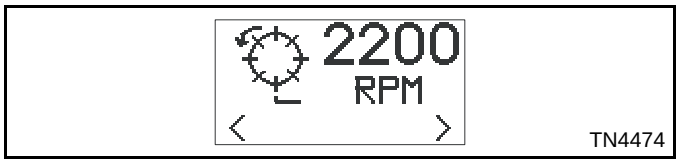

Displays fixed reel speed setting. Fixed reel speed setting is not used for any FOC other than 0.

Hour Meter

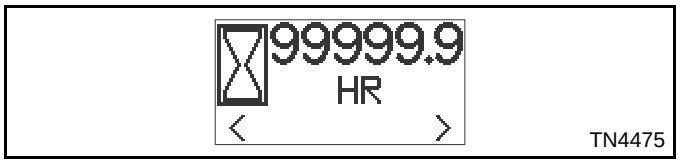

Displays total hours unit has been operated.

Daytime Illumination

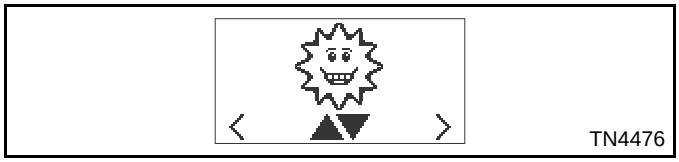

When selected, LCD displays dark pixels on a light background. Press the black button to toggle between daytime and nighttime illumination.

Nighttime Illumination

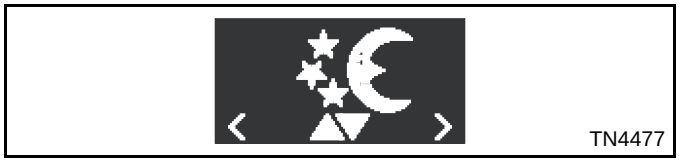

When selected, LCD displays light pixels on a dark background. Press the black button (J) to toggle between daytime and nighttime illumination.

Maintenance Mode PIN

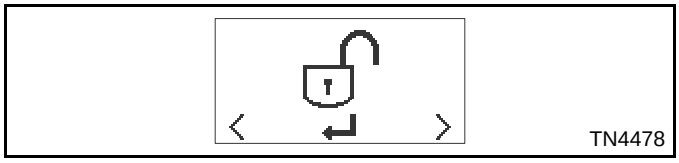

Used to enter Maintenance Mode. Maintenance Mode PIN is required.

Maintenance Mode

See Figure 4-20.

Maintenance Mode is used to set and adjust all functional values for the Eclipse Mower. The LCD displays available in Maintenance Mode are maintenance hours, backlap, system voltage, travel speed, set FOC, reel speed, traction motor current draw, reel motor current draw, total motor current draw, set mow speed, set reel speed, set power source, set number of reel blades, calibrate speed paddle, calibrate bail lever, set display units, and factory reset.

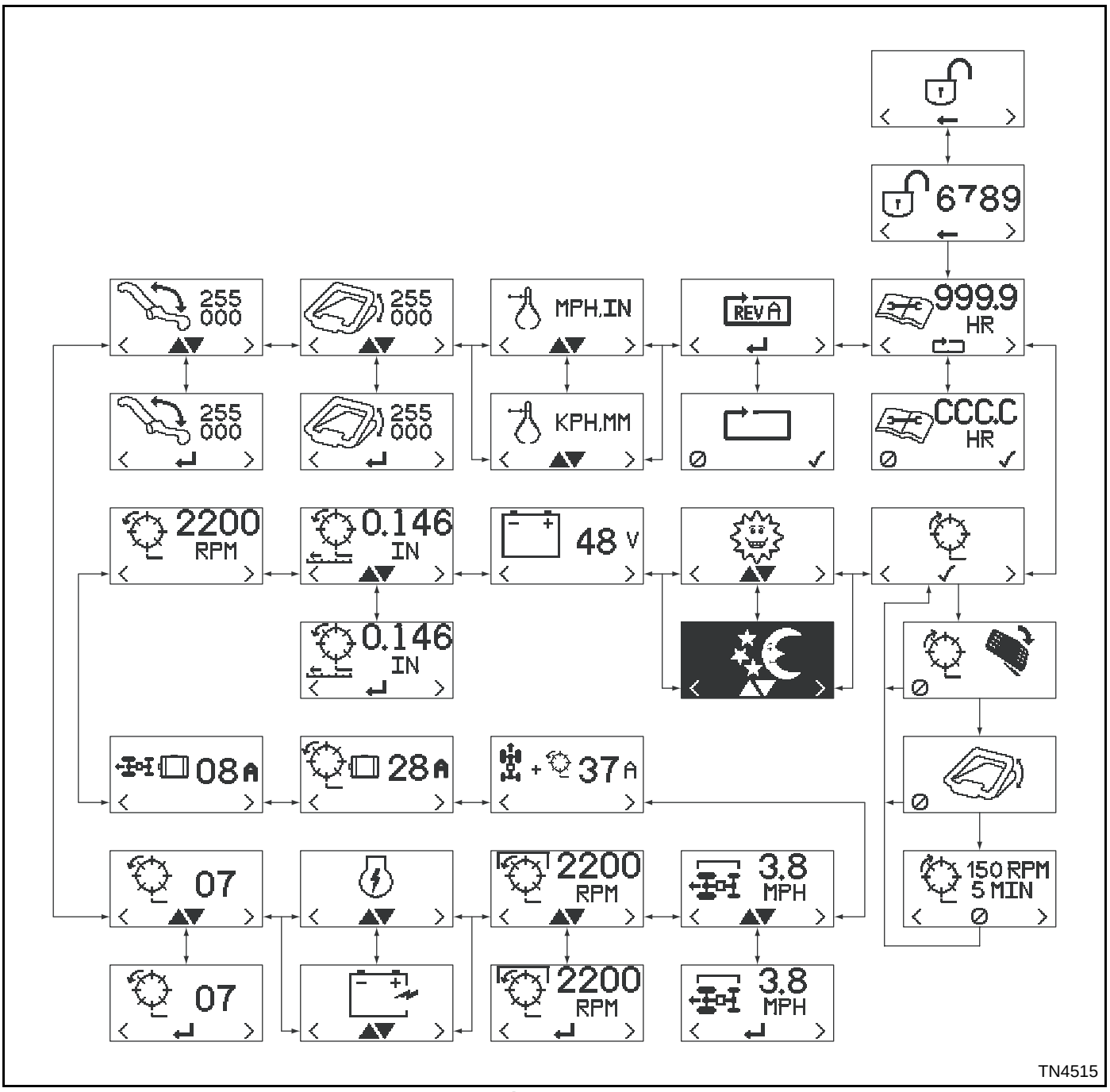

Figure 4-20

Refer to Operator Mode for descriptions of Daytime/Nighttime Illumination, System Voltage, and Fixed Reel Speed screens. (See “Operator Mode” on page 4-38.)

Maintenance Mode

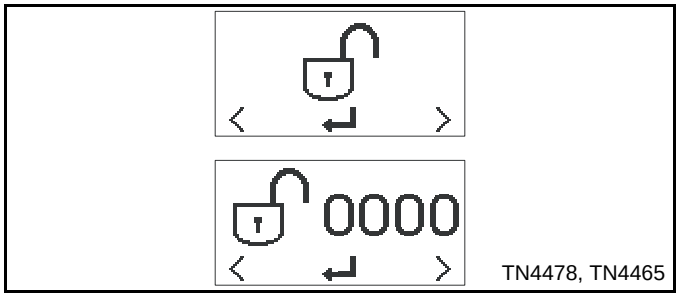

TN4478, TN4465

To enter Maintenance Mode, press either orange button (1 or 4) until Maintenance Mode PIN screen is on the display and press black button (3). Use the orange buttons (1 and 4) to select and the black button (3) to enter the digits for the Maintenance Mode PIN.

NOTE

The default PIN for Maintenance Mode is 6789.

Maintenance Hours

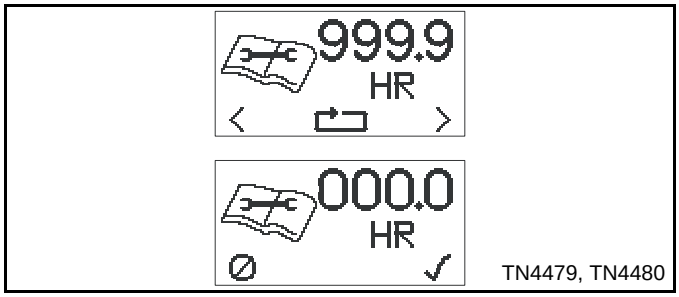

TN4479, TN4480

Maintenance Hours system can track up to 999.9 hours for maintenance purposes.

To reset maintenance hours, press either orange button (1 or 4) on the front cover until the maintenance hours screen is on the LCD display. Press the black button (3) to move to the confirm reset screen. Press the right orange button (1) to confirm reset, or press the left orange button (4) to cancel reset.

Backlap Select

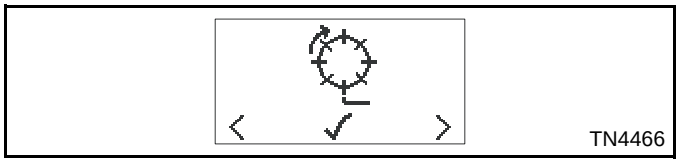
TN4466

Used to switch mower to backlap mode.

Set FOC

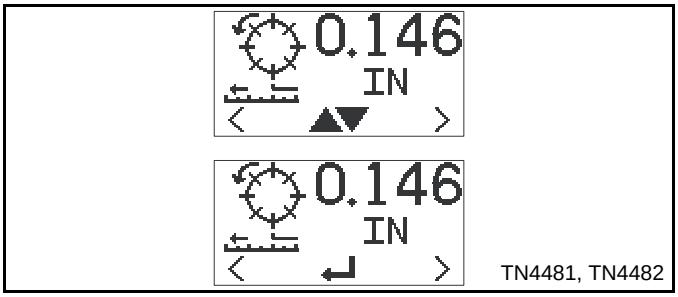

TN4481, TN4482

To set the fixed FOC, press either orange button (1 or 4) on the front cover until the FOC set screen is on the LCD display. Press the black button (3) to enter set mode. Use the orange buttons to raise (1) or lower (4) the FOC value to the desired setting. Press the black button to set speed.

Traction Motor Current

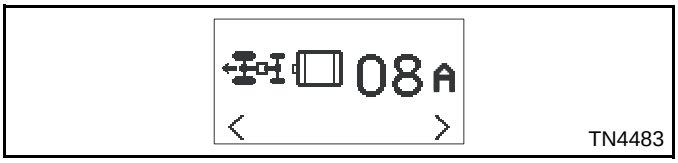

TN4483

Displays current draw of traction motor. Fault will be displayed if current draw is greater than 30 amps for one second.

Reel Motor Current

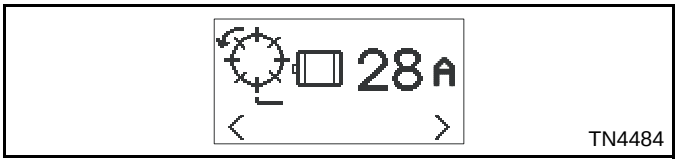

TN4484

Displays current draw of reel motor. Fault will be displayed if current draw is greater than 30 amps for one second.

Total Motor Current

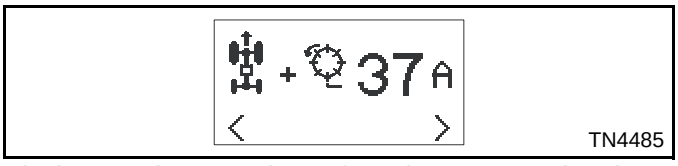

TN4485

Displays total current draw of traction motor and reel motor.

Maximum Mow Speed

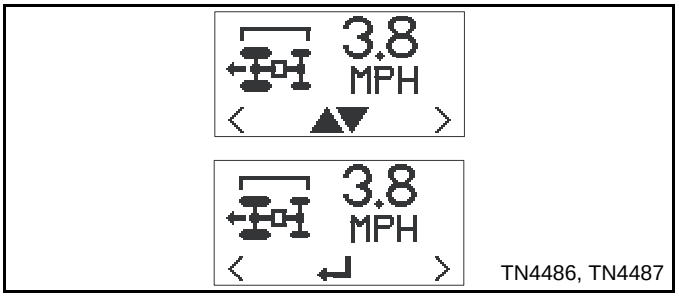

TN4486, TN4487

To set the maximum mow speed, press either orange button (1 or 4) on the front cover until the set max mow speed screen is on the LCD display. Press the black button (3) to enter set mode. Use the orange buttons to raise (1) or lower (4) the maximum mow speed to the desired speed. Press the black button to set speed.

Fixed Reel Speed

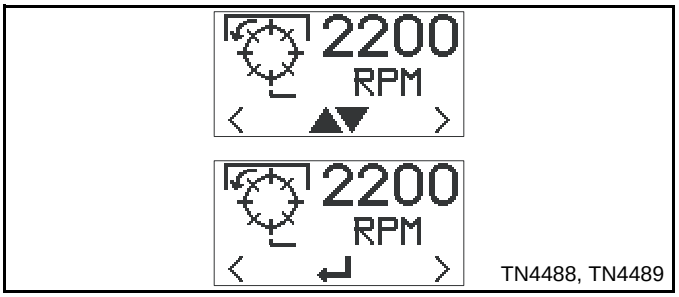

TN4488, TN4489

To set the fixed reel speed, the FOC setting must be 0. Press either of the orange buttons (1 or 4) on the front cover until the set reel speed screen is on the LCD display. Press the black button (3) to enter set mode. Use the orange buttons to raise (1) or lower (4) the reel speed to the desired setting.

Gen-Set Power Module

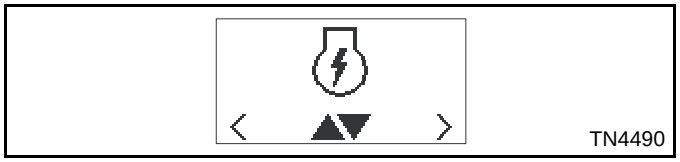
TN4490

Used to indicate the gen-set power module is installed on the mower.

This setting is used by system controllers and does not affect operation of mower. Do not operate mower with incorrect power module setting. Press the black button (3) to toggle between the power module settings.

Battery Power Module

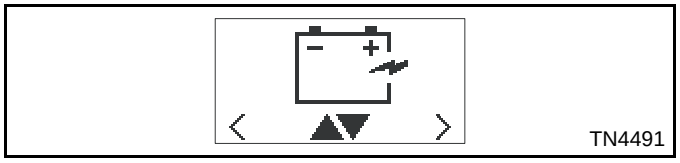
TN4491

Used to indicate the battery power module is installed on the mower.

This setting is used by system controllers and does not affect operation of mower. Do not operate mower with incorrect power module setting. Press the black button (3) to toggle between the power module settings.

Set Number of Reel Blades

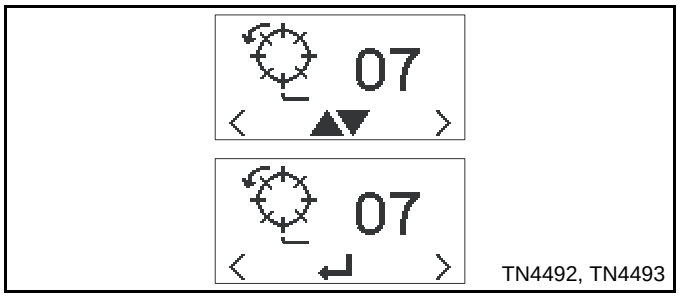

TN4492, TN4493

To set the number of reel blades, press either orange button (1 or 4) on the front cover until the reel blades screen is on the LCD display. Press the black button (3) to enter set mode. Use the orange buttons to set the number of blades.

Speed Paddle Calibration

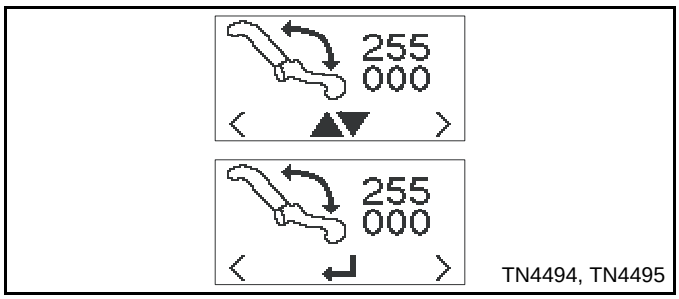

TN4494, TN4495

To calibrate the paddle, press either orange button (1 or 4) on the front cover until the speed paddle calibration screen is on the LCD display. Press the black button (3) to enter set mode. Move the speed paddle through its entire range of movement to determine minimum and maximum values.

Values displayed will change as controls are moved.

Bail Lever Calibration

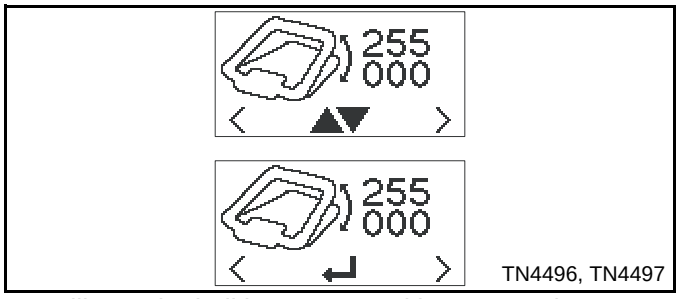

TN4496, TN4497

To calibrate the bail lever, press either orange button (1 or 4) on the front cover until the bail lever calibration screen is on the LCD display. Press the black button (3) to enter set mode. Fully engage and disengage the bail lever to determine minimum and maximum values.

Values displayed will change as controls are moved.

Display Units

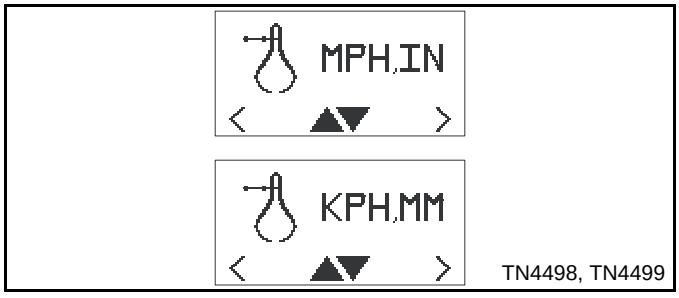

TN4498, TN4499

To set the display units, press either orange button (1 or 4) on the front cover until the units screen is on the LCD display. Press the black button (3) to toggle between English (MPH, IN) and metric (KPH, MM) units.

Factory Reset

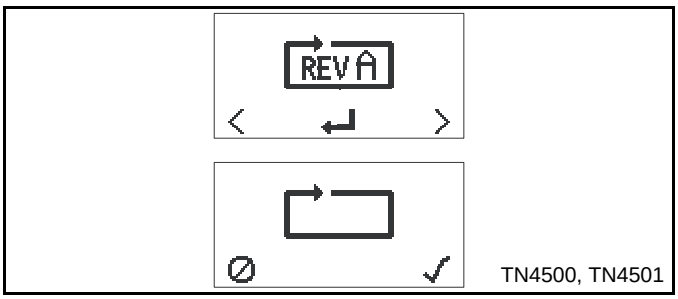

TN4500, TN4501

NOTE

Factory Reset will reset the controller to factory default values for an 11-blade reel. Select and change values as necessary for other reels.

To reset controller to factory default values, press either orange button (1 or 4) on the front cover until the factory reset screen is on the LCD display. Press the black button (3) to move to the confirm reset screen. Press the right orange button (1) to confirm reset, or press the left orange button (4) to cancel reset.

Blade Count.....11

Maximum Mow Speed.....3.8 mph (6.1 kph)

Reel Speed.....2200 rpm

Fixed FOC Setting.....0.146

Display Units.....English

4

Component Testing

Electrical System and Component Testing

WARNING

Before cleaning, adjusting, or repairing this equipment, disengage mow switch, engage park brake, move key switch to the off position, and remove key to prevent injuries.

When performing maintenance other than adjustments that require the reel and/or traction motors to be running, disconnect the battery pack/gen-set plug to prevent accidental motor engagement and bodily injury.

General Information

Repair of the electrical system, for the most part, is limited to the replacement of defective components or wiring. Wiring diagrams are provided in this section for troubleshooting and/or testing the electrical system. Specific component testing and replacement information, where applicable, is also provided in this section.

In addition to testing a suspected faulty component, it may be necessary to check for shorts or breaks in the wiring to the component. A common method of testing wires or circuits is to perform a continuity check as described in the following tests.

NOTE

Before performing any component or wiring tests, check for corrosion and loose or missing connections.

If a component (switch, relay, etc.) is removed for testing or replacement, be sure to identify and label all wires so that the component can be installed correctly.

Continuity Test

Required Tools or Equipment
Digital Multimeter, Ohmmeter, or Continuity Tester

1. Identify and locate the wire or component to be checked using the electrical schematic.

NOTE

Some meters may have a continuity tester setting that uses a buzzer to indicate continuity. See the meter operator's manual for more information.

2. If using a multimeter, set it to read ohms or set meter to continuity setting.
3. Disconnect the ends of the wire being tested.
4. Touch meter leads to the ends of the wire or to the terminals of the component to be tested.

   Does meter read less than 0.02 ohm, and/or does the buzzer sound?

   YES *The wire is good.*

   NO *Proceed to step 5.*
5. Use a known good jumper wire of the correct gauge to bypass the wire in question.
6. Test the function of the circuit.

   Does the circuit now operate properly?

   YES *Replace the wire.*

   NO *Continue testing other wires and components in the circuit.*

Resistance Test

Required Tools or Equipment
Digital Multimeter or Ohmmeter

1. Identify and locate the wire or component to be checked using the electrical schematic.

NOTE

On some meters it will be necessary to select an ohms scale. Select an appropriate range for the component being tested. Refer to the specifications listed in the component test procedure.

2. If using a multimeter, set it to read ohms.
3. Isolate (disconnect) the component to be tested from the circuit to prevent a false reading through the circuit.
4. Connect the meter leads to the terminals of the component being tested. Check the component test procedure for specifications and additional test conditions.

   Does the resistance through the component match the specified value listed in the test procedure?

   YES *The component is good.*

   NO *Replace the component.*

Battery Pack Test

Required Tools or Equipment
Digital Multimeter

IMPORTANT

- **Battery pack must be fully charged before beginning test.**
- **Be sure machine is securely parked on kickstand.**
- **Be sure to back the bedknife away from reel before beginning test.**
- **During testing, the total amperage draw should be 6.5 ± 0.5 amps.**

1. Park the mower safely.
   (See “Park Mower Safely” on page 1-5.)
2. Back the bedknife away from reel.
   (See “Bedknife-to-Reel Adjustment” on page 8-14.)
3. Open battery pack cover. (See “Battery Pack” on page 4-56.)

WARNING

- **Conduct battery test in a secured environment.**
- **Be sure the area is clear of all bystanders.**
- **Do not leave the machine unattended during the test procedure.**
- **Clear the test area of all tools and debris.**
- **Failure to follow safety guidelines could result in death or serious injury.**

4. Move the key switch to the start/on position.
5. Engage the mow switch, increase the machine speed, and engage the Operator Presence Control (OPC) bail lever.

   Operate the machine at full speed until system voltage decreases to approximately 42 VDC.

   When system voltage reaches 42 VDC, the reel motor will be disengaged by the control module.
6. Using a multimeter, with the traction motor still engaged, check the battery voltage level of each battery.

   Battery voltage will vary slightly from one battery to the next.

   The average voltage reading should not vary more than 1.5 VDC from the highest measurement.
7. Disengage the OPC bail lever, move the key switch to the off position, and disconnect the battery pack connector.

   Do all batteries test within 1.5 VDC of the highest reading?

   YES *Batteries are good.*

   NO *Battery is faulty; replace the battery.*
8. Install the battery pack cover.
   (See “Battery Pack” on page 4-56.)
9. Adjust bedknife-to-reel contact.
   (See “Bedknife-to-Reel Adjustment” on page 8-14.)

Gen-Set Output Test

See Figures 4-21 through 4-23.

1. Park the mower safely. (See “Park Mower Safely” on page 1-5.)

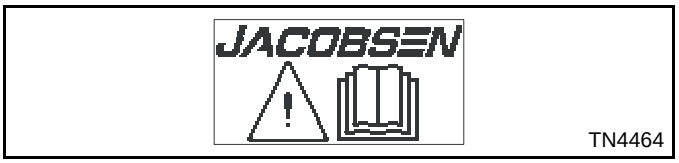

Figure 4-21: Start-Up Screen

NOTE

The Start-Up screen will display for up to five seconds when system is started.

2. Start the mower.
3. Press the orange buttons on the front handle cover to toggle to the system voltage screen.

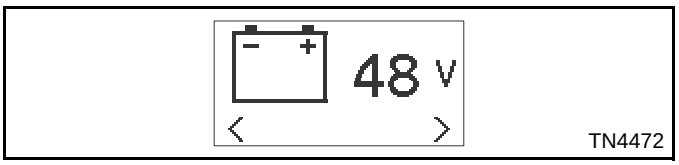

Figure 4-22: System Voltage Screen

NOTE

The System Voltage screen will display system voltage. Screen will be replaced with alert screen when system voltage drops below 38 volts for gen-set models or 42 volts for battery pack models or if voltage rises above 66 volts.

4. Move throttle lever to full speed and observe system voltage on the display.

   Is 59 V displayed on the screen?

   YES *System voltage is correct. Test complete.*

   NO *Adjust engine rpm. Proceed to step 5.*

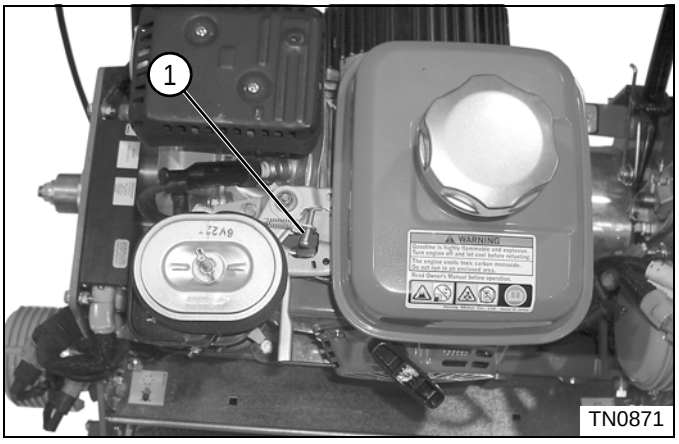

Figure 4-23

5. Adjust engine speed stop screw (1) clockwise to decrease engine speed and voltage output, and counterclockwise to increase engine speed and voltage output.
6. Adjust as needed until 59 V is displayed on the system voltage screen.

Engine On/Off Switch

See Figures 4-24 and 4-25.

Required Tools or Equipment
Digital Multimeter, Ohmmeter, or Continuity Tester

1. Park the mower safely. (See “Park Mower Safely” on page 1-5.)

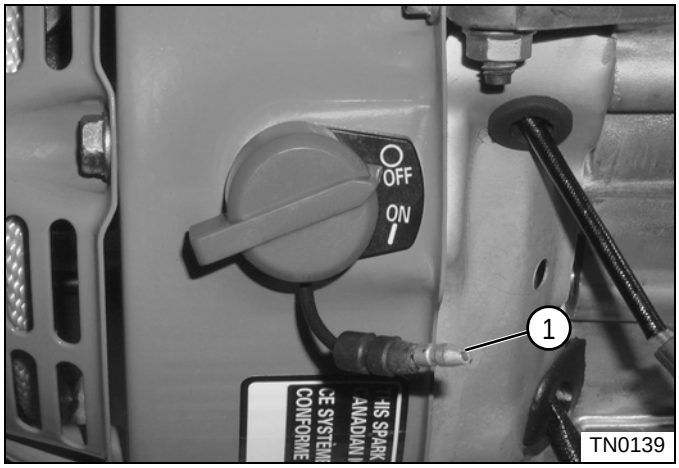

Figure 4-24

NOTE

Label all wires before disconnecting to ensure correct installation.

2. Disconnect engine on/off switch wire (1).
3. Remove the blower housing from the engine. (Refer to engine manual.)

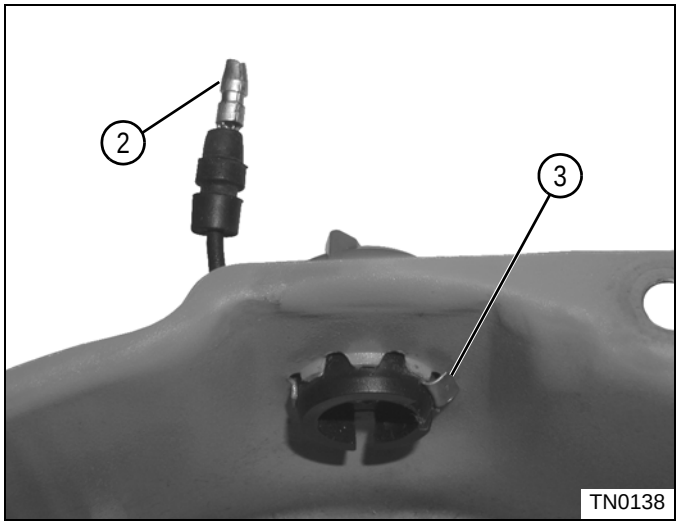

Figure 4-25

4. Connect test leads between engine on/off switch wire (2) and grounding tab (3).
5. Move engine on/off switch to the on position and measure resistance.

   Is the resistance value 0.02 ohm or less?

   YES *The switch is faulty; replace the switch.*

   NO *Proceed to step 6.*
6. Move engine on/off switch to the off position and measure resistance.

   Is the resistance value 0.02 ohm or less?

   YES *The switch is good.*

   NO *The switch is faulty; replace the switch.*

Key Switch Test

See Figure 4-26.

Required Tools or Equipment
Digital Multimeter, Ohmmeter, or Continuity Tester

1. Park the mower safely. (See “Park Mower Safely” on page 1-5.)
2. Remove handle cover. (See “Handle Cover” on page 6-4.)
3. Remove key switch. (See “Key Switch” on page 4-60.)

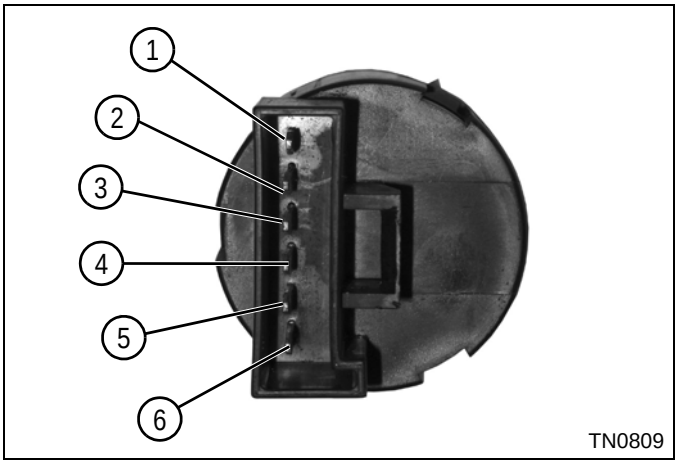

Figure 4-26

4. Move key switch to the off position.
5. Measure resistance between terminals (5 and 6).

   Is the resistance value 0.02 ohm or less?

   YES *Proceed to step 6.*

   NO *The key switch is faulty.*
6. Move key switch to the run position. Measure resistance between terminals (3 and 4).

   Is the resistance value 0.02 ohm or less?

   YES *Proceed to step 7.*

   NO *The key switch is faulty.*
7. With key switch in the run position, measure resistance between terminals (1 and 6).

   Is the resistance value 0.02 ohm or less?

   YES *Proceed to step 8.*

   NO *The key switch is faulty.*
8. Move the key switch to the start position. Measure resistance between terminals (1 and 2).

   Is the resistance value 0.02 ohm or less?

   YES *Proceed to step 9.*

   NO *The key switch is faulty; replace the switch.*
9. With key switch in the start position, measure resistance between terminals (3 and 4).

   Is the resistance value 0.02 ohm or less?

   YES *The key switch is good.*

   NO *The key switch is faulty; replace the switch.*

Mow Switch Test

See Figure 4-27.

Required Tools or Equipment
Digital Multimeter, Ohmmeter, or Continuity Tester

1. Park the mower safely. (See “Park Mower Safely” on page 1-5.)
2. Remove mow switch. (See “Mow Switch” on page 4-61.)

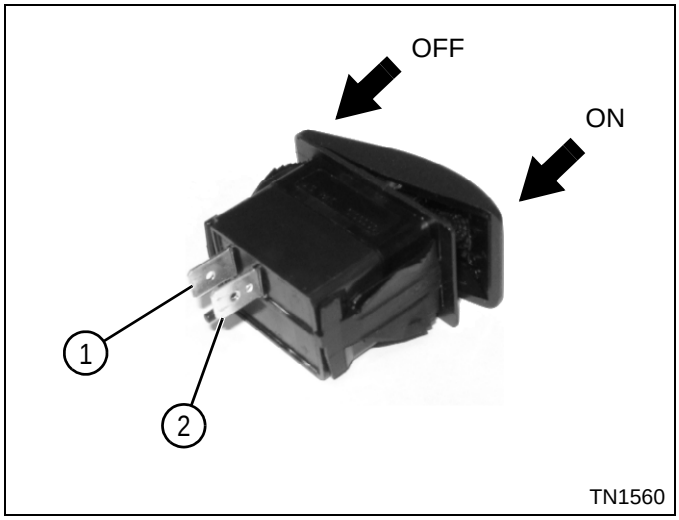

Figure 4-27

3. Place mow switch in the on position.
4. Set the meter to read ohms.
5. Touch meter leads to each other and confirm a resistance value of 0.0 ohms.
6. Measure the resistance between terminals (1 and 2).

   Is the resistance value 0.02 ohm or less?

   YES *Proceed to step 7.*

   NO *The mow switch is faulty; replace the mow switch.*
7. Place mow switch in the off position.
8. Measure the resistance between terminals (1 and 2).

   Is the resistance value 0.02 ohm or less?

   YES *The mow switch is faulty; replace the mow switch.*

   NO *The mow switch is good.*

Light Switch Test

See Figure 4-28.

Required Tools or Equipment
Digital Multimeter, Ohmmeter, or Continuity Tester

1. Park the mower safely. (See “Park Mower Safely” on page 1-5.)
2. Remove light switch. (See “Light Switch” on page 4-61.)

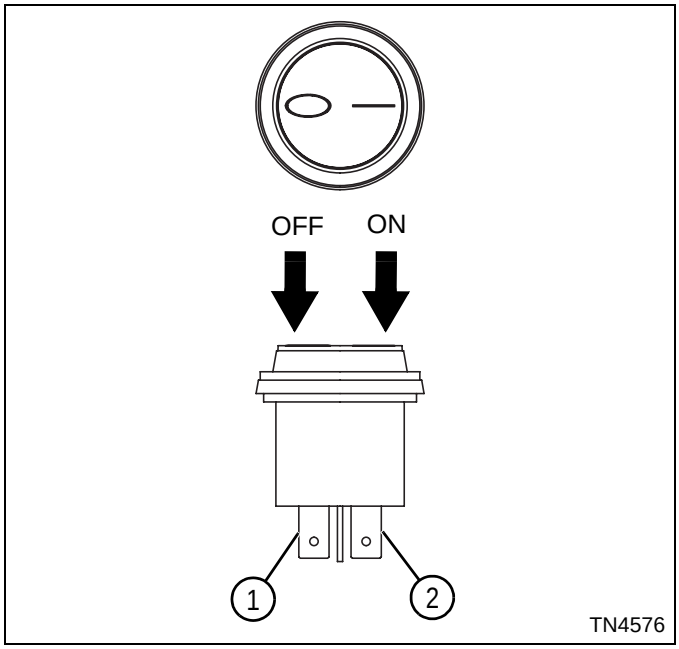

Figure 4-28

3. Place mow switch in the on position.
4. Set the meter to read ohms.
5. Touch meter leads to each other and confirm a resistance value of 0.0 ohms.
6. Measure the resistance between terminals (1 and 2).

   Is the resistance value 0.02 ohm or less?

   YES *Proceed to step 7.*

   NO *The light switch is faulty; replace the light switch.*
7. Place light switch in the off position.
8. Measure the resistance between terminals (1 and 2).

   Is the resistance value 0.02 ohm or less?

   YES *The light switch is faulty; replace the light switch.*

   NO *The light switch is good.*

30A Fuse Test

See Figure 4-29.

Required Tools or Equipment
Digital Multimeter or Ohmmeter

1. Park the mower safely. (See “Park Mower Safely” on page 1-5.)
2. Remove 30A fuse. (See “30A Fuse” on page 4-60.)

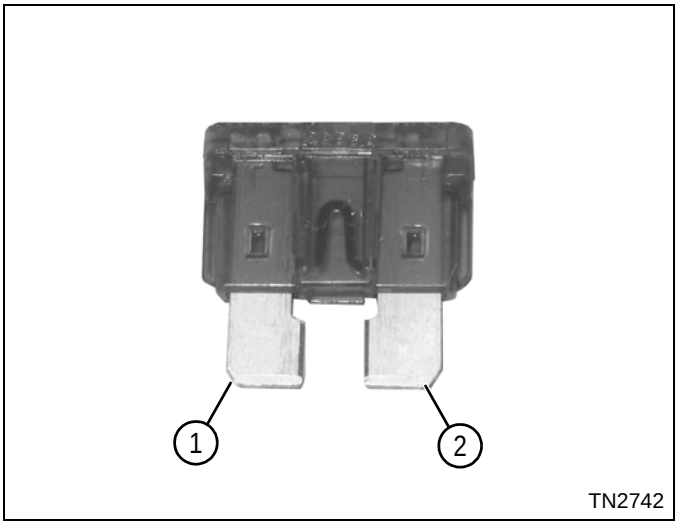

Figure 4-29

3. Set the meter to read ohms.
4. Touch meter leads to each other and confirm a resistance value of 0.0 ohms.
5. Measure the resistance between terminals (1 and 2).

Is the resistance value 0.02 ohm or less?

YES *Fuse is good.*

NO *Fuse is faulty; replace the fuse.*

Battery Pack Fuse Test

See Figure 4-30.

Required Tools or Equipment
Digital Multimeter, Ohmmeter, or Continuity Tester

1. Park the mower safely. (See “Park Mower Safely” on page 1-5.)
2. Remove battery pack. (See “Battery Pack” on page 4-56.)
3. Remove battery pack fuse. (See “Battery Pack Fuse” on page 4-58.)

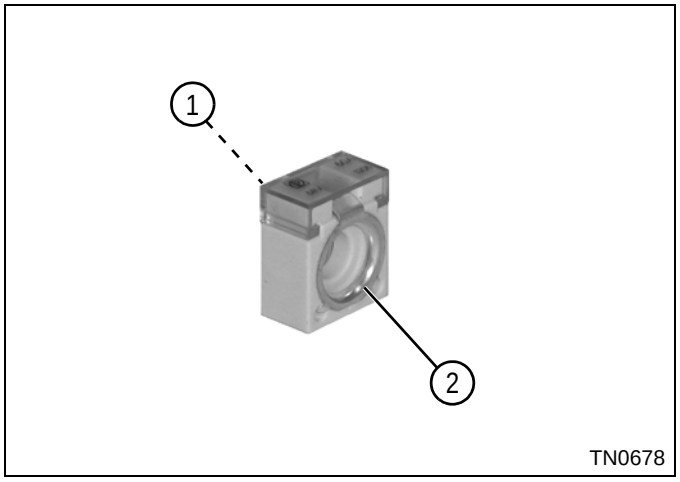

Figure 4-30

4. Measure the resistance between ring terminals (1 and 2).

Is the resistance value 0.02 ohm or less?

YES *Battery pack fuse is good.*

NO *Battery pack fuse is faulty; replace the battery pack fuse.*

Ceramic Resistor Test

See Figure 4-31.

Required Tools or Equipment
Digital Multimeter, Ohmmeter, or Continuity Tester

1. Park the mower safely. (See “Park Mower Safely” on page 1-5.)

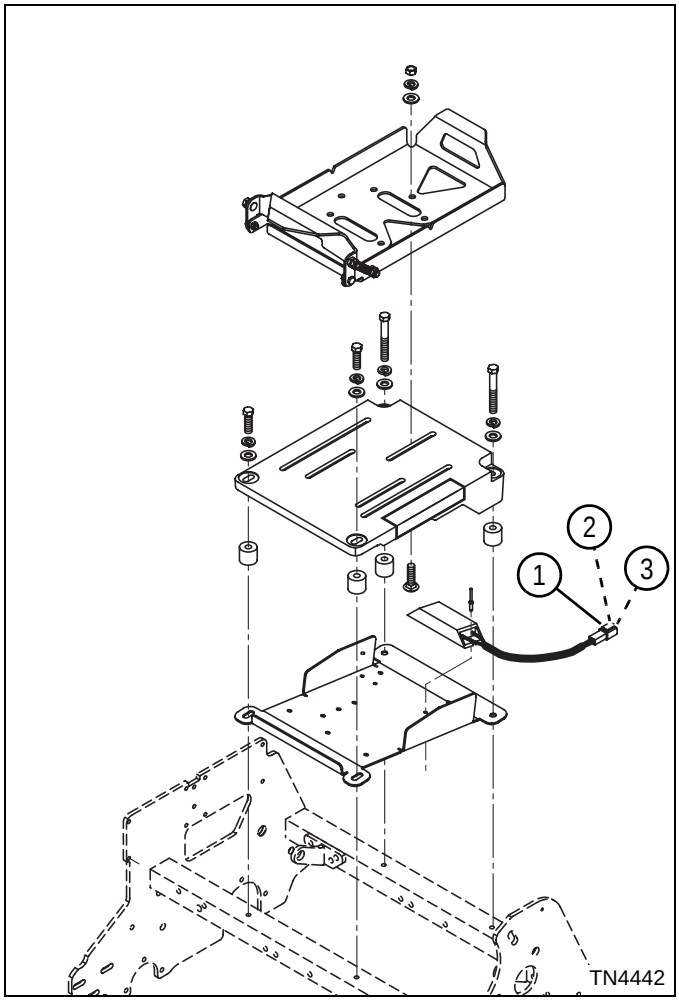

Figure 4-31

NOTE

Label all wires before disconnecting to ensure correct installation.

2. Disconnect ceramic resistor connector (1).
3. Measure the resistance between terminals (2 and 3).

   Is the resistance value 5 ohms ± 5% at 68° F?

   YES *Ceramic resistor is good.*

   NO *Ceramic resistor is faulty; replace the ceramic resistor.*

120-Ohm Resistor Connector Test

See Figure 4-32.

Required Tools or Equipment
Digital Multimeter, Ohmmeter, or Continuity Tester

1. Park the mower safely. (See “Park Mower Safely” on page 1-5.)

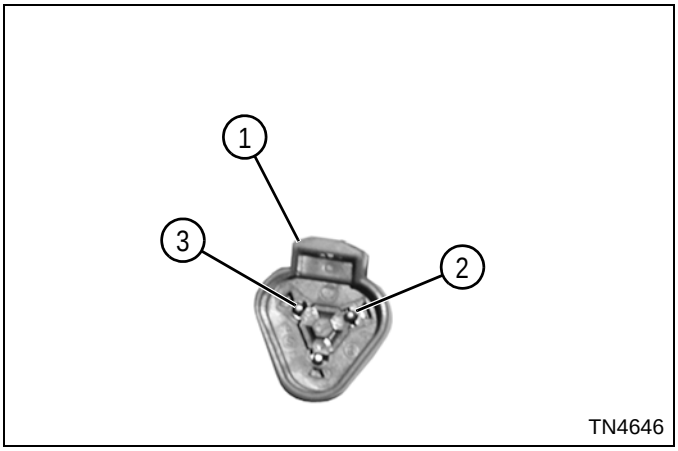

Figure 4-32

NOTE

Label all wires before disconnecting to ensure correct installation.

2. Disconnect 120-ohm resistor connector (1).
3. Measure the resistance between terminals (2 and 3).

   Is the resistance value 120-ohms ± 10% at 68° F?

   YES *120-ohm resistor connector is good.*

   NO *120-ohm resistor connector is faulty; replace the 120-ohm resistor connector.*

Traction Motor Test

See Figure 4-33.

1. Park the mower safely. (See “Park Mower Safely” on page 1-5.)
2. For battery pack powered mowers, remove power module. (See “Battery Tray and Power Module Mount” on page 4-69.)
3. For gen-set powered mowers, remove engine. (See “Engine” on page 3-4.)

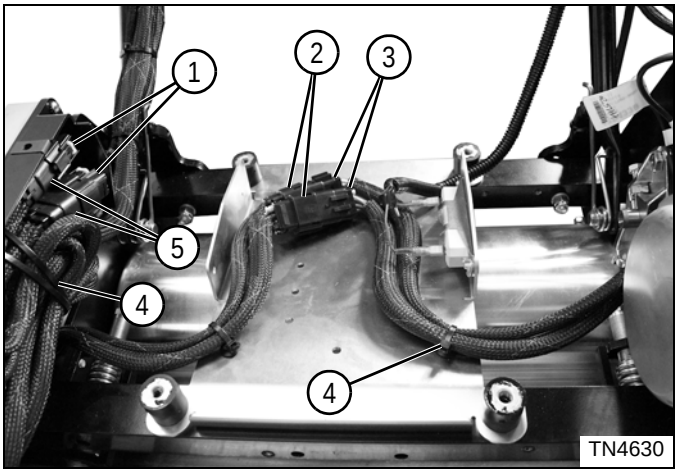

Figure 4-33

4. Cut cable ties (4).

NOTE

Label all wires before disconnecting to ensure correct installation.

5. Disconnect traction motor harness connectors (3) from traction control unit harness connectors (2).
6. Disconnect reel motor harness connectors (5) from reel control unit harness connectors (1).
7. Connect traction motor harness connectors (3) to reel control unit harness connectors (1). Do not connect reel motor harness connectors (5).
8. For battery pack powered mowers, install power module. (See “Battery Tray and Power Module Mount” on page 4-69.)
9. For gen-set powered mowers, install engine. (See “Engine” on page 3-4.)
10. Move key switch to the start/on position. Engage mow switch and Operator Presence Control (OPC) bail.

    Does traction motor engage?

    YES *Traction motor is good.*

    NO *Traction motor is faulty; replace the traction motor.*

11. Disengage OPC bail and mow switch. Move key switch to the off position.
12. For battery pack powered mowers, remove power module. (See “Battery Tray and Power Module Mount” on page 4-69.)
13. For gen-set powered mowers, remove engine. (See “Engine” on page 3-4.)
14. Disconnect traction motor harness connectors (3) from reel control unit harness connectors (1).
15. Connect reel motor harness connectors (5) to reel control unit harness connectors (1).
16. Connect traction motor harness connectors (3) to traction control unit harness connectors (2).
17. Install new cable ties (4).
18. For battery pack powered mowers, install power module. (See “Battery Tray and Power Module Mount” on page 4-69.)
19. For gen-set powered mowers, install engine. (See “Engine” on page 3-4.)

Reel Motor Test

See Figure 4-34.

1. Park the mower safely. (See “Park Mower Safely” on page 1-5.)
2. Back the bedknife away from reel. (See “Bedknife-to-Reel Adjustment” on page 8-14.)
3. For battery pack powered mowers, remove power module. (See “Battery Tray and Power Module Mount” on page 4-69.)
4. For gen-set powered mowers, remove engine. (See “Engine” on page 3-4.)

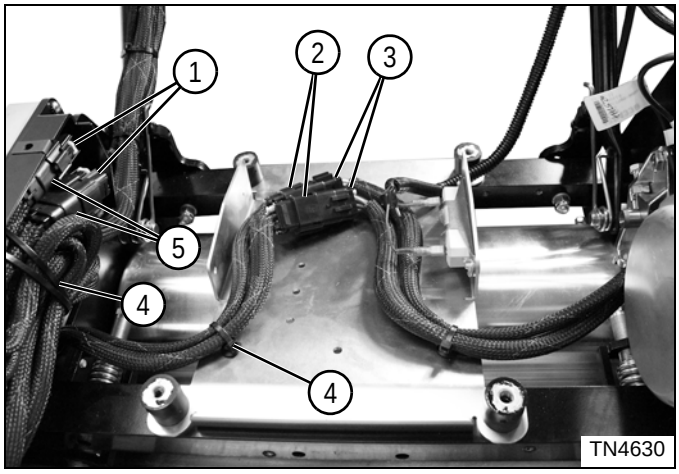

Figure 4-34

5. Cut cable ties (4).

NOTE

Label all wires before disconnecting to ensure correct installation.

6. Disconnect traction motor harness connectors (3) from traction control unit harness connectors (2).
7. Disconnect reel motor harness connectors (5) from reel control unit harness connectors (1).
8. Connect reel motor harness connectors (5) to traction control unit harness connectors (2). Do not connect traction motor harness connectors (3).
9. For battery pack powered mowers, install power module. (See “Battery Tray and Power Module Mount” on page 4-69.)
10. For gen-set powered mowers, install engine. (See “Engine” on page 3-4.)
11. Move key switch to the start/on position, engage Operator Presence Control (OPC) bail, and increase machine speed with speed paddle.

    Does reel motor engage?

    YES *Reel motor is good.*

    NO *Reel motor is faulty; replace the reel motor.*

12. Disengage OPC bail and move key switch to the off position.
13. For battery pack powered mowers, remove power module. (See “Battery Tray and Power Module Mount” on page 4-69.)
14. For gen-set powered mowers, remove engine. (See “Engine” on page 3-4.)
15. Disconnect reel motor harness connectors (5) from traction control unit harness connectors (2).
16. Connect reel motor harness connectors (5) to reel control unit harness connectors (1).
17. Connect traction motor harness connectors (3) to traction control unit harness connectors (2).
18. Install new cable ties (4).
19. For battery pack powered mowers, install power module. (See “Battery Tray and Power Module Mount” on page 4-69.)
20. For gen-set powered mowers, install engine. (See “Engine” on page 3-4.)
21. Adjust bedknife-to-reel contact. (See “Bedknife-to-Reel Adjustment” on page 8-14.)

Throttle Potentiometer Test

See Figure 4-35.

Required Tools or Equipment
Digital Multimeter or Ohmmeter

1. Park the mower safely. (See “Park Mower Safely” on page 1-5.)
2. Remove throttle potentiometer. (See “Throttle Potentiometer” on page 4-65.)

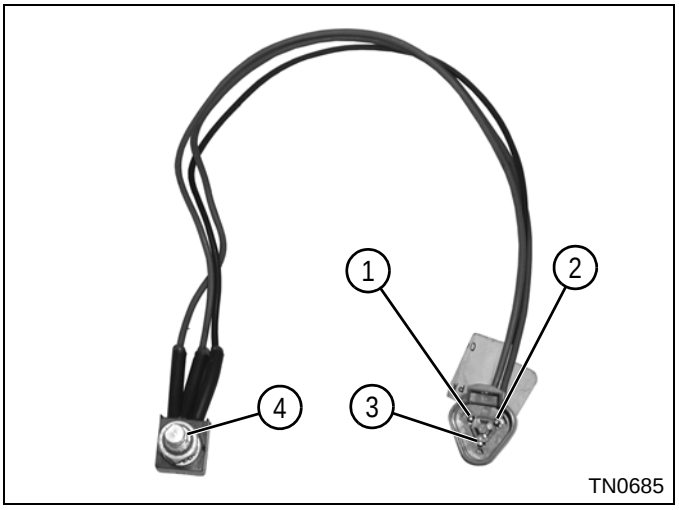

Figure 4-35

3. Measure resistance between terminals (2 and 3). Resistance must range between 3710 and 6890 ohms.

   Is resistance measurement within specification?

   YES *Proceed to step 4.*

   NO *Throttle potentiometer is faulty; replace the throttle potentiometer.*

4. Measure resistance between terminals (1 and 2) while rotating stem (4). Low end resistance must range between 18.9 and 35.1 ohms. High end resistance must range between 3710 and 6890 ohms.

   Is resistance measurement within specification?

   YES *Proceed to step 5.*

   NO *Throttle potentiometer is faulty; replace the throttle potentiometer.*

5. Measure resistance between terminals (1 and 3) while rotating stem (4). Low end resistance must range between 18.9 and 35.1 ohms. High end resistance must range between 3710 and 6890 ohms.

   Is resistance measurement within specification?

   YES *Throttle potentiometer is good.*

   NO *Throttle potentiometer is faulty; replace the throttle potentiometer.*

6. If throttle potentiometer was replaced, perform speed paddle calibration procedure. (See “Speed Paddle Calibration” on page 4-43.)

Bail Potentiometer Test

See Figure 4-36.

Required Tools or Equipment
Digital Multimeter or Ohmmeter

1. Park the mower safely. (See “Park Mower Safely” on page 1-5.)
2. Remove bail potentiometer. (See “Bail Potentiometer” on page 4-70.)

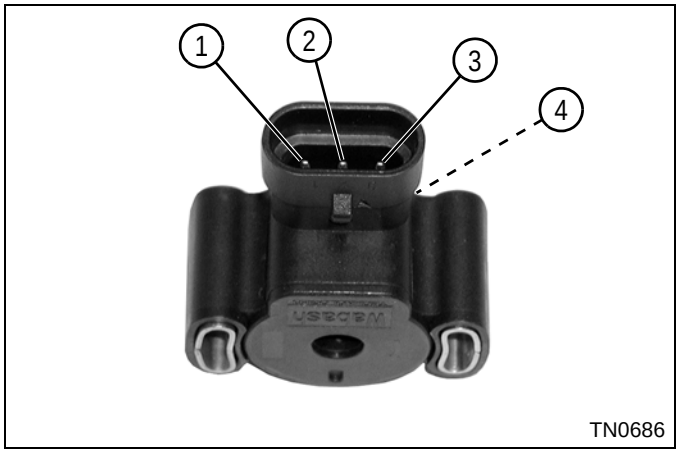

Figure 4-36

3. Measure resistance between terminals (1 and 3). Resistance must range between 3640 and 6760 ohms.

   Is resistance measurement within specification?

   YES *Proceed to step 4.*

   NO *Bail potentiometer is faulty; replace the bail potentiometer.*

4. Measure resistance between terminals (1 and 2) while rotating stem (4). Low end resistance must range between 770 and 1430 ohms. High end resistance must range between 4060 and 7540 ohms.

   Is resistance measurement within specification?

   YES *Proceed to step 5.*

   NO *Bail potentiometer is faulty; replace the bail potentiometer.*

5. Measure resistance between terminals (2 and 3) while rotating stem (4). Low end resistance must range between 1190 and 2210 ohms. High end resistance must range between 4410 and 8190 ohms.

   Is resistance measurement within specification?

   YES *Bail potentiometer is good.*

   NO *Bail potentiometer is faulty; replace the bail potentiometer.*

Repair

Battery Pack

Removal and Installation

See Figure 4-37.

Required Materials
Dielectric Grease (Jacobsen PN 365422)

1. Park the mower safely. (See “Park Mower Safely” on page 1-5.)

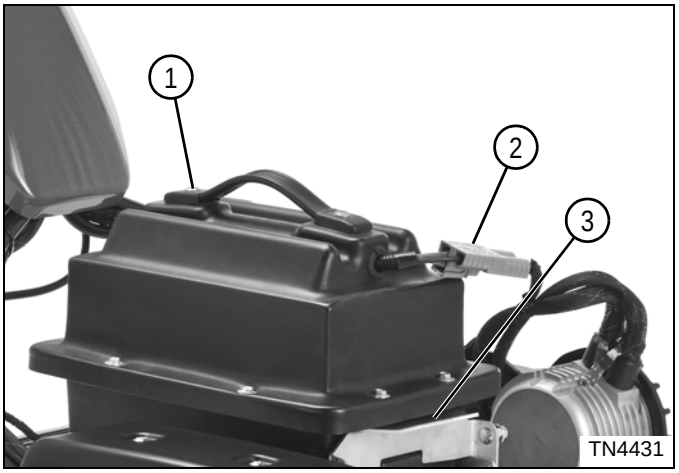

Figure 4-37

2. Disconnect battery connector (2).
3. Press down on spring plate (3) and remove battery pack (1).

Installation Note

- *Install battery pack by reversing the order of removal.*

Disassembly

See Figures 4-38 through 4-40.

WARNING

Always disconnect the negative terminal first, and the positive terminal last. Connect the positive terminal first, and the negative terminal last. Use care when testing or working around live circuits to prevent arcing. Arcing could result in death or serious injury.

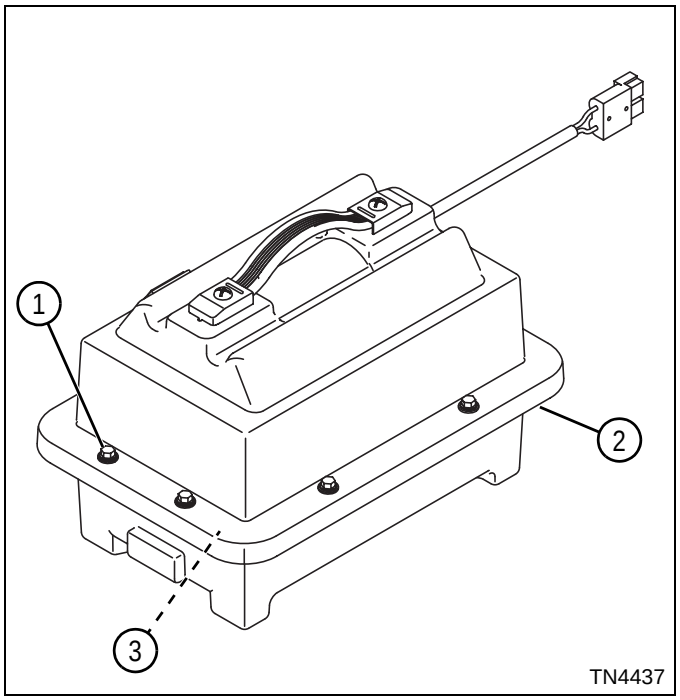

Figure 4-38

1. Remove eight screws (1) and straps (3).
2. Open battery pack cover (2). Do not remove at this time.

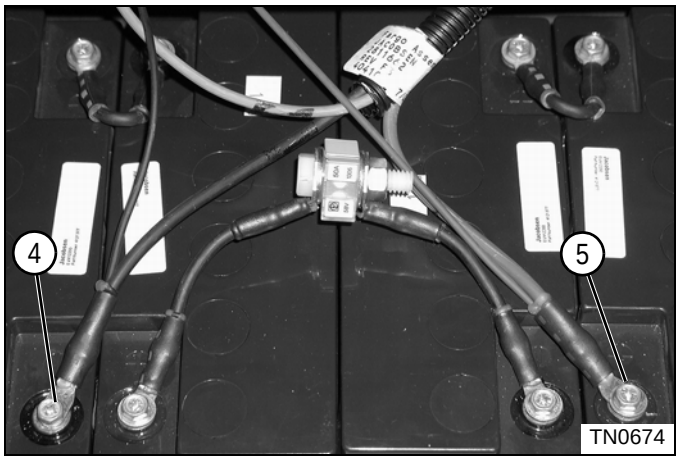

Figure 4-39

NOTE

Label all wires before disconnecting to ensure correct installation.

3. Disconnect main harness negative lead (4).
4. Disconnect main harness positive lead (5).

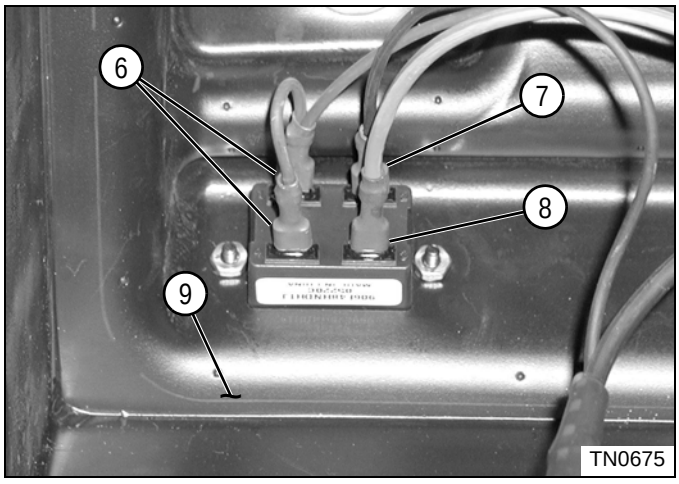

Figure 4-40

5. Disconnect battery gauge positive leads (6).
6. Disconnect battery gauge negative lead (7).
7. Disconnect battery gauge signal wire lead (8).
8. Remove battery pack cover (9).

Disassembly Note

Disconnect remaining wire leads, as needed, to service individual batteries.

Assembly

See Figure 4-41.

Required Materials
Dielectric Grease (Jacobsen PN 365422)

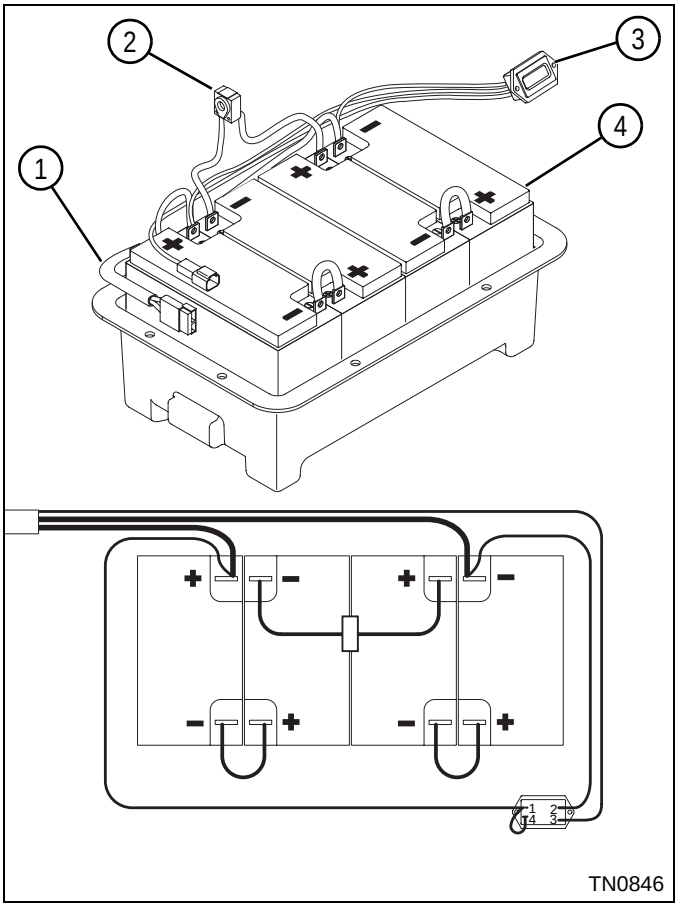

1	Main Harness	3	Battery Gauge
2	Fuse	4	Battery (4)

Figure 4-41: Battery Pack Wiring Diagram

Assembly Notes

- *Connect wire leads as noted during removal.*
- *Apply dielectric grease (Jacobsen PN 365422) to any connectors removed.*
- *Assemble the battery pack by reversing the order of removal.*

4

Battery Gauge

Removal and Installation

See Figure 4-42.

Required Materials
Dielectric Grease (Jacobsen PN 365422)

1. Park the mower safely. (See “Park Mower Safely” on page 1-5.)
2. Remove battery pack cover. (See “Battery Pack” on page 4-56.)

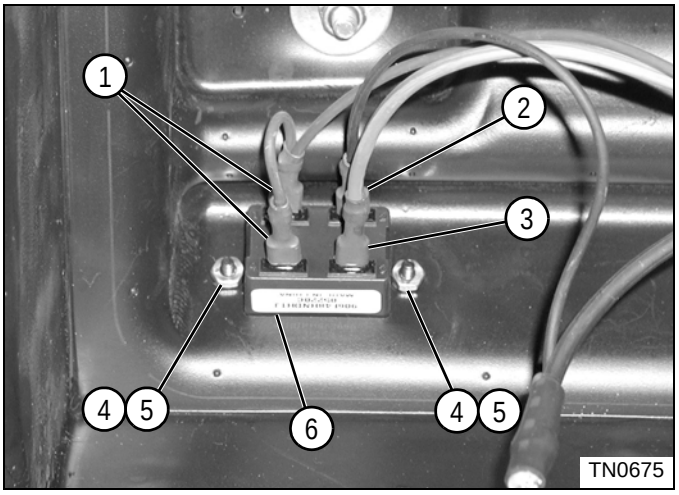

Figure 4-42

NOTES

Label all wires before disconnecting to ensure correct installation.

3. Disconnect battery gauge positive leads (1).
4. Disconnect battery gauge negative lead (2) and signal wire lead (3).
5. Remove screws (4), nuts (5), and battery gauge (6).

Installation Notes

- *Install battery gauge by reversing the order of removal.*
- *Apply dielectric grease (Jacobsen PN 365422) to any connectors removed.*
- *Install battery pack cover. (See “Battery Pack” on page 4-56.)*

Battery Pack Fuse

Removal and Installation

See Figure 4-43.

Required Materials
Dielectric Grease (Jacobsen PN 365422)

1. Park the mower safely. (See “Park Mower Safely” on page 1-5.)
2. Remove battery pack cover. (See “Battery Pack” on page 4-56.)

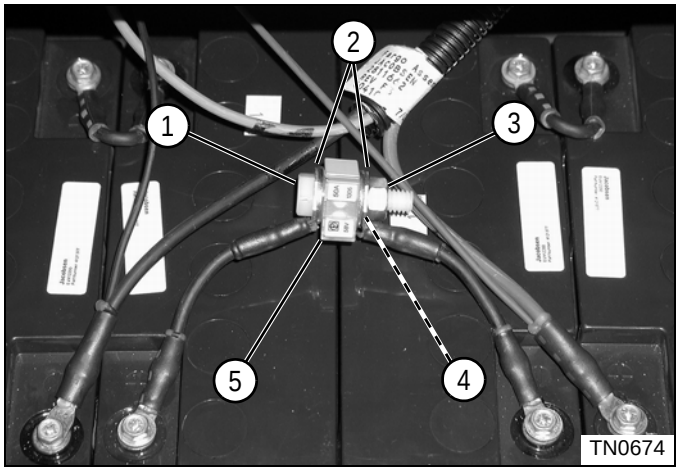

Figure 4-43

NOTES

Label all wires before disconnecting to ensure correct installation.

3. Remove nylon screw (1), flat washers (2), lock washer (4), and nut (3).
4. Remove fuse (5).

Installation Notes

- *Install battery pack fuse by reversing the order of removal.*
- *Apply dielectric grease (Jacobsen PN 365422) to flat washers (2) prior to installation.*
- *Torque nut (3) to 25 lb-in. (2.82 N·m).*
- *Install battery pack cover. (See “Battery Pack” on page 4-56.)*

Generator

Removal and Installation

See Figures 4-44 and 4-45.

Required Materials
• Loctite® 5900 FIPG (Jacobsen PN 4248230) • Dielectric Grease (Jacobsen PN 365422)

1. Park the mower safely. (See “Park Mower Safely” on page 1-5.)

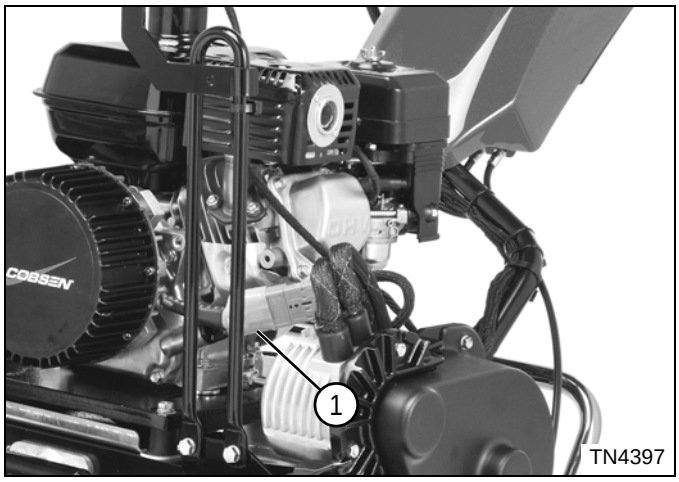

Figure 4-44

NOTE

Label all wires before disconnecting to ensure correct installation.

2. Disconnect gen-set connector (1).

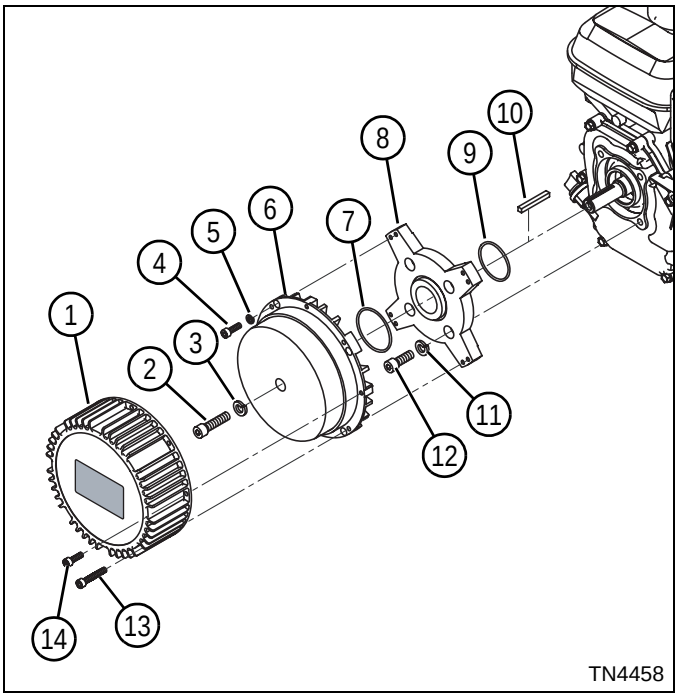

Figure 4-45

3. Remove four generator cover mounting screws (13), four generator cover mounting screws (14), and generator cover (1).
4. Remove engine shaft screw (2) and lock washer (3).
5. Remove four generator mounting screws (4) and lock washers (5), and remove generator assembly (6).
6. Remove four adapter plate mounting screws (12) and lock washers (11).
7. Remove adapter plate (8).
8. Inspect O-rings (7 and 9) for wear or damage and replace as necessary.

Installation Notes

- *Install generator by reversing the order of removal.*
- *Be sure to align crankshaft key (10) when installing generator.*
- *Apply Loctite® 5900 FIPG (Jacobsen PN 4248230) around generator mounting screw holes on generator assembly (6) prior to installation.*
- *Tighten engine shaft screw (2) to 20.4 lb-ft (27.7 N·m).*
- *Tighten generator mounting screws (4) to 68 lb-in. (7.7 N·m).*
- *Tighten adapter plate mounting screws (12) to 14.4 lb-ft (19.5 N·m).*
- *Tighten generator cover mounting screws (13 and 14) to 68 lb-in. (7.7 N·m).*
- *Apply dielectric grease (Jacobsen PN 365422) to any connectors removed.*

Key Switch

Removal and Installation

See Figure 4-46.

Required Materials
Dielectric Grease (Jacobsen PN 365422)

1. Park the mower safely. (See “Park Mower Safely” on page 1-5.)
2. Remove handle cover. (See “Handle Cover” on page 6-4.)

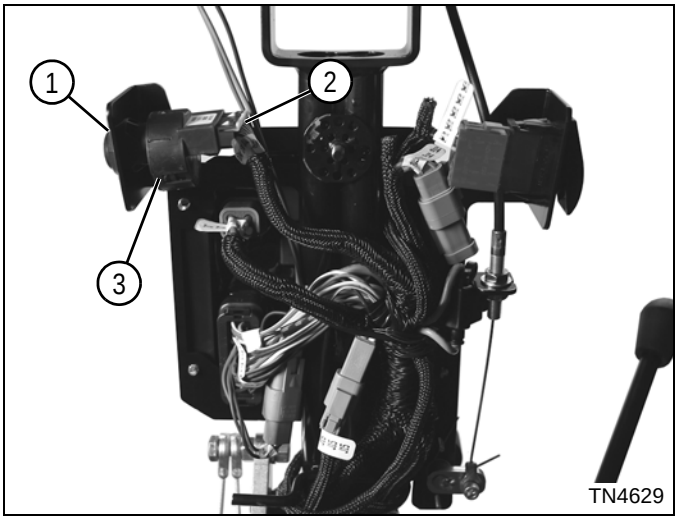

Figure 4-46

NOTE

Label all wires before disconnecting to ensure correct installation.

3. Disconnect key switch connector (2).
4. Remove key switch nut (1) and key switch assembly (3).

Installation Notes

- *Install key switch by reversing the order of removal.*
- *Apply dielectric grease (Jacobsen PN 365422) to any connectors removed.*
- *Install handle cover. (See “Handle Cover” on page 6-4.)*

30A Fuse

Removal and Installation

See Figure 4-47.

1. Park the mower safely. (See “Park Mower Safely” on page 1-5.)
2. Remove handle cover. (See “Handle Cover” on page 6-4.)

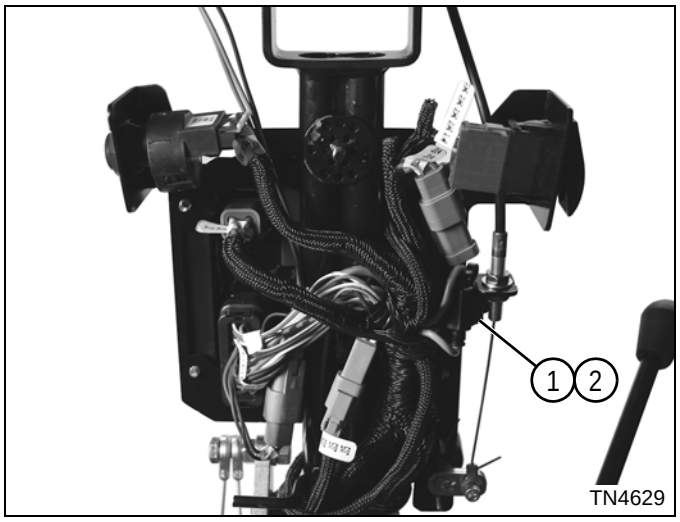

Figure 4-47

3. Remove the protective fuse cover (1) and remove 30A fuse (2).

Installation Note

Install 30A fuse by reversing the order of removal.

Mow Switch

Removal and Installation

See Figure 4-48.

Required Materials
Dielectric Grease (Jacobsen PN 365422)

1. Park the mower safely. (See “Park Mower Safely” on page 1-5.)
2. Remove handle cover. (See “Handle Cover” on page 6-4.)

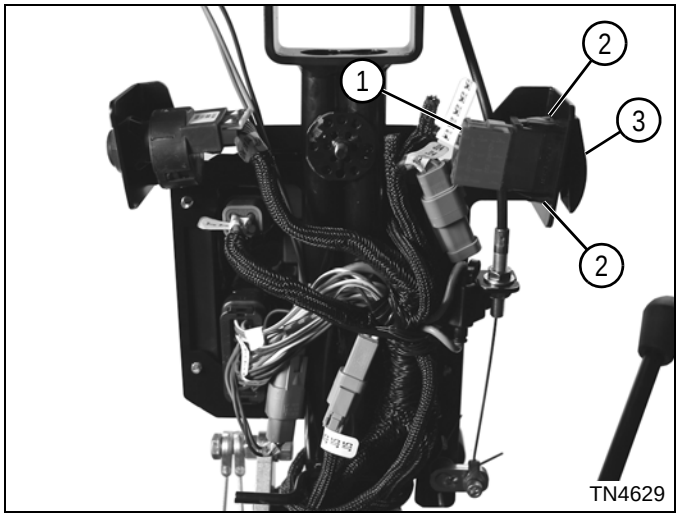

Figure 4-48

NOTE

Label all wires before disconnecting to ensure correct installation.

3. Disconnect mow switch wire connector (1).
4. Depress mounting tabs (2) and remove mow switch (3).

Installation Notes

- *Install mow switch by reversing the order of removal.*
- *Apply dielectric grease (Jacobsen PN 365422) to any connectors removed.*

Light Switch

Removal and Installation

See Figure 4-49.

Required Materials
Dielectric Grease (Jacobsen PN 365422)

1. Park the mower safely. (See “Park Mower Safely” on page 1-5.)
2. Remove handle cover. (See “Handle Cover” on page 6-4.)

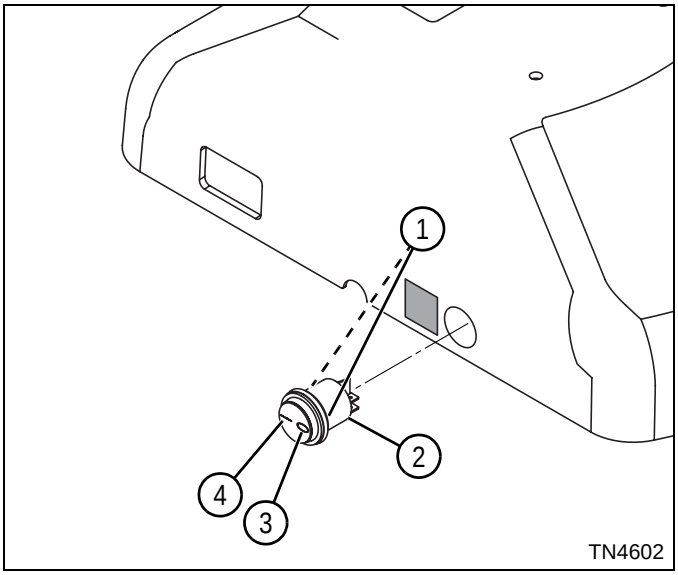

Figure 4-49

NOTE

Label both wires and terminal locations on switch before disconnecting to ensure correct installation.

3. Disconnect light switch wire terminals.
4. Depress mounting tabs (1) and remove light switch (2).

Installation Notes

- *Install light switch by reversing the order of removal.*
- *Position light switch with the on side (4) of switch facing toward the handle loop.*
- *Connect terminal on red wire to the off (3) side of switch. Connect terminal on blue wire to the on (4) side of switch.*
- *Ensure that wires are not pinched between cover halves, and that wiring does not contact or interfere with moving parts.*
- *Apply dielectric grease (Jacobsen PN 365422) to any connectors removed.*

Reel Motor

Removal and Installation

See Figures 4-50 and 4-51.

Required Materials
NLGI Grade 2 LB Grease

1. Park the mower safely. (See “Park Mower Safely” on page 1-5.)

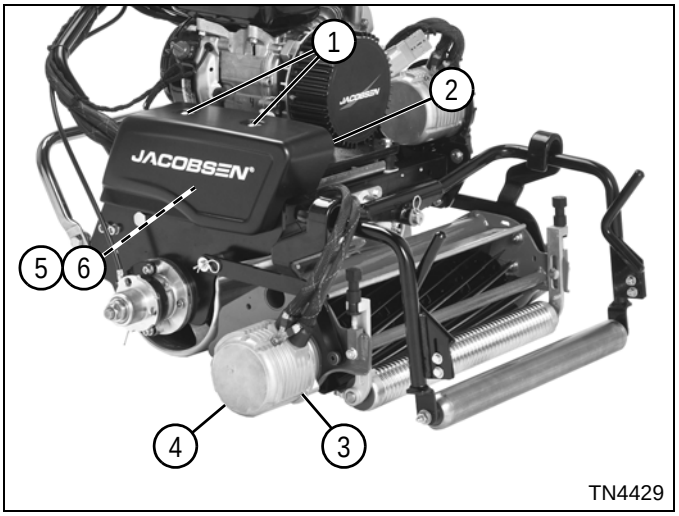

Figure 4-50

NOTE

Label all wires before disconnecting to ensure correct installation.

2. Remove screws (1) and motor controller cover (2), and disconnect reel motor wire harness connectors (5 and 6) at the motor controller.
3. Remove three screws (3) and reel motor (4).

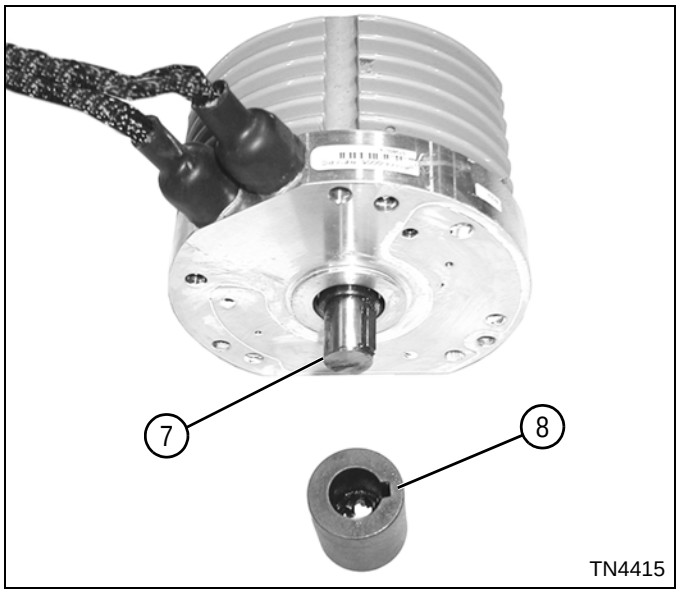

Figure 4-51

4. Remove coupler (8) from reel motor shaft (7).

Installation Notes

- *Install reel motor by reversing the order of removal.*
- *Coat the reel motor shaft (7) with grease that meets or exceeds NLGI Grade 2 LB specifications before installing coupler (8).*
- *Do NOT apply dielectric grease or any lubricant to reel motor harness connectors.*

Traction Motor

Removal

See Figures 4-52 through 4-56.

1. Park the mower safely. (See “Park Mower Safely” on page 1-5.)
2. For battery pack powered mowers, remove power module. (See “Battery Tray and Power Module Mount” on page 4-69.)
3. For gen-set powered mowers, remove engine. (See “Engine” on page 3-4.)

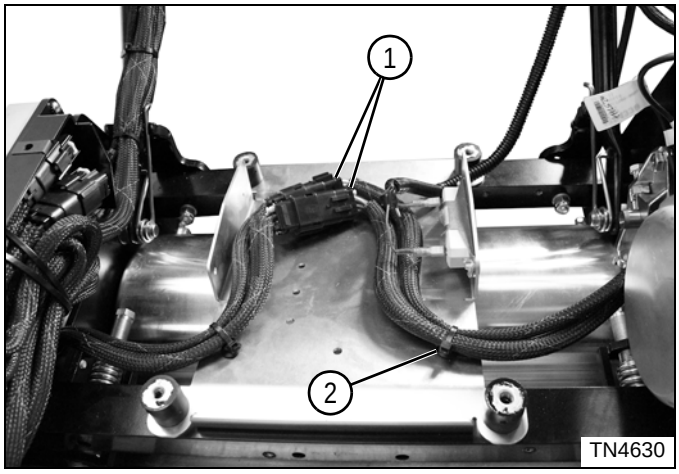

Figure 4-52

4. Cut cable tie (2).

NOTE

Label all wires before disconnecting to ensure correct installation.

5. Disconnect traction motor harness connectors (1).

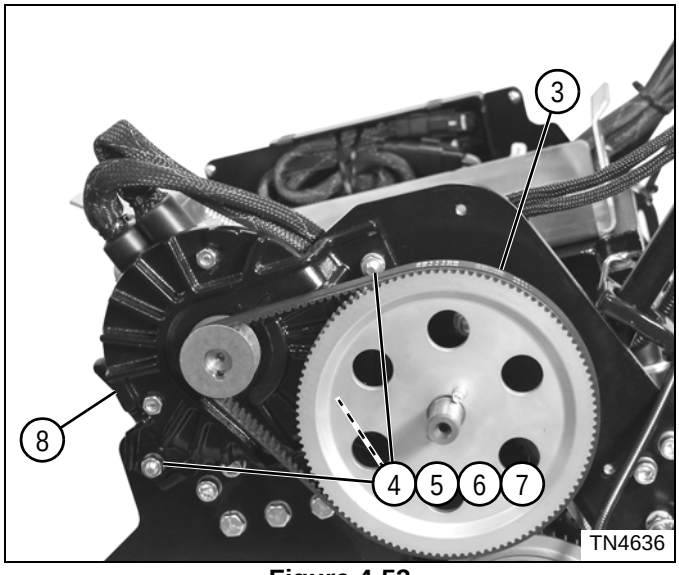

Figure 4-53

6. Remove traction drive belt cover. (See “Traction Drive Belt Cover” on page 5-7.)
7. Remove three nuts (4), lock washers (5), flat washers (6), and screws (7).
8. Remove transfer belt (3).
9. Remove traction motor and mount assembly (8).

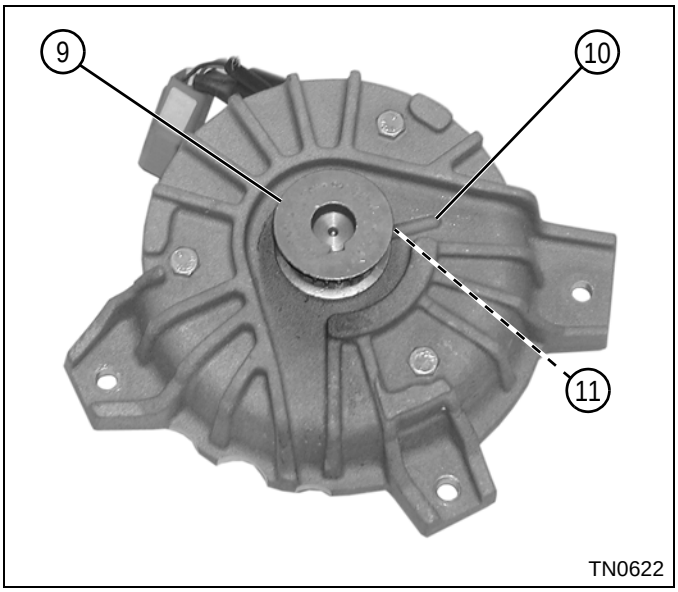

Figure 4-54

10. Rotate pulley (9) until set screw (11) is aligned with groove (10).
11. Loosen set screw (11).

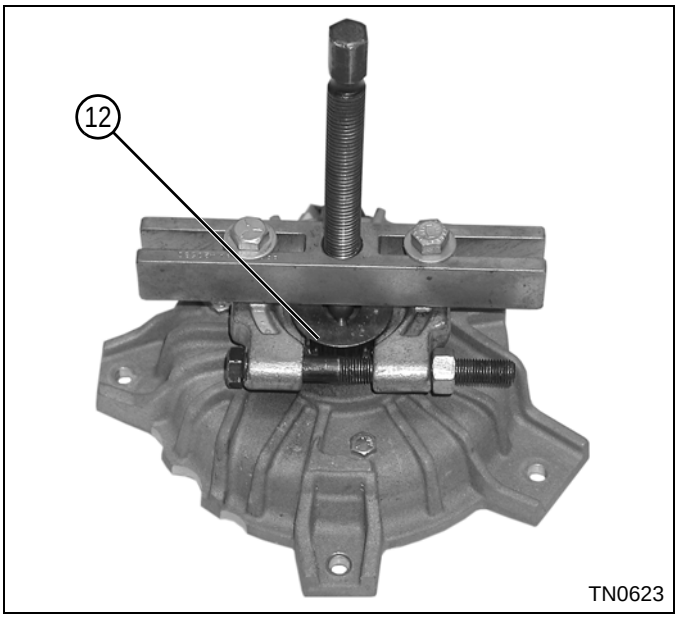

Figure 4-55

12. Remove pulley (12) using a knife-edge puller.

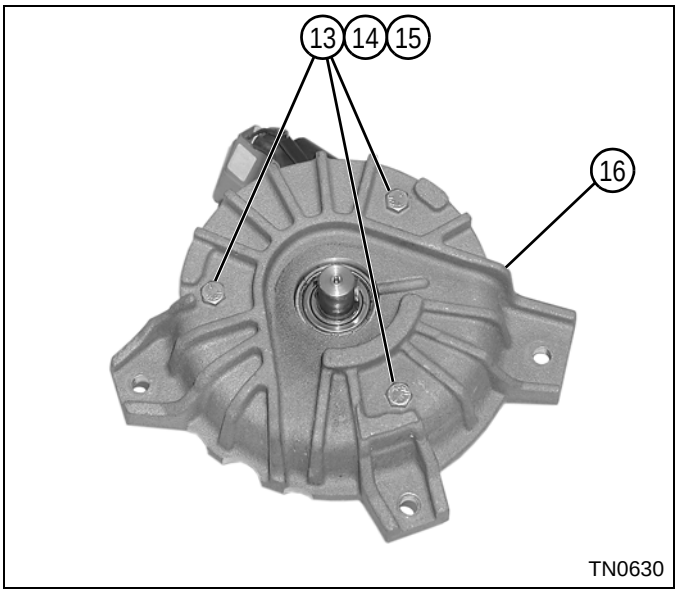

Figure 4-56

13. Remove screws (13), lock washers (14), nuts (15), and motor mount assembly (16).

Installation

See Figures 4-57 through 4-61.

Required Materials
• Loctite® 242 (Blue) Thread Sealant • Dielectric Grease (Jacobsen PN 365422)

1. Park the mower safely. (See “Park Mower Safely” on page 1-5.)

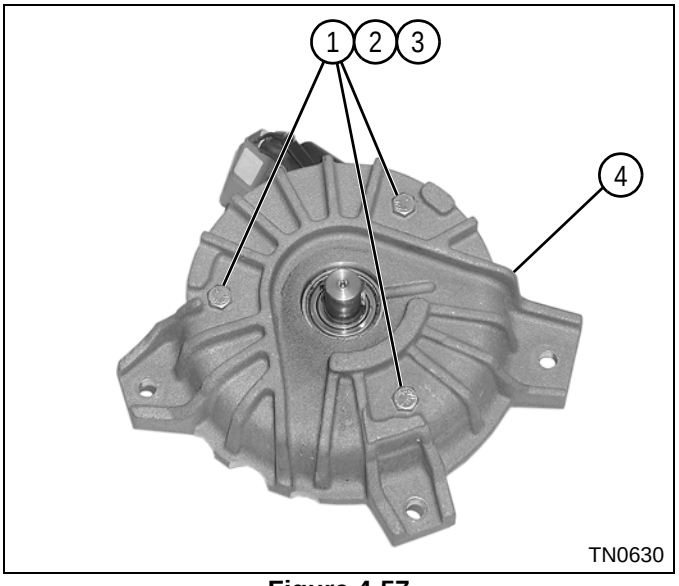

Figure 4-57

2. Install motor mount assembly (4) using three screws (1), lock washers (2), and nuts (3).

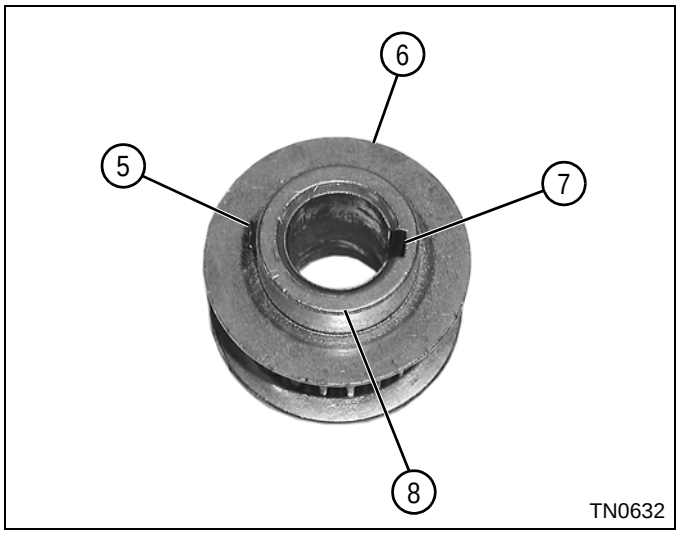

Figure 4-58

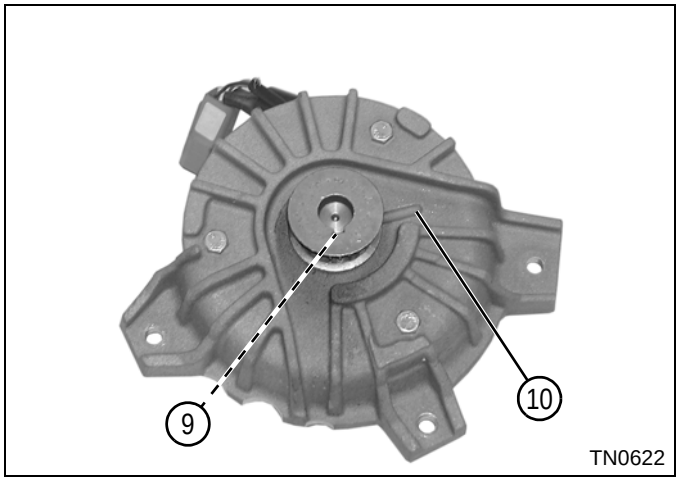

Figure 4-59

3. Apply Loctite® 242 (Blue) Thread Sealant to set screw (5) and install until flush with the inside diameter of pulley (6).
4. Align relief (7) with keyway (9). Press pulley (6) onto motor shaft until shoulder (8) bottoms out.
5. Align set screw (5) with groove (10). Tighten set screw (5).

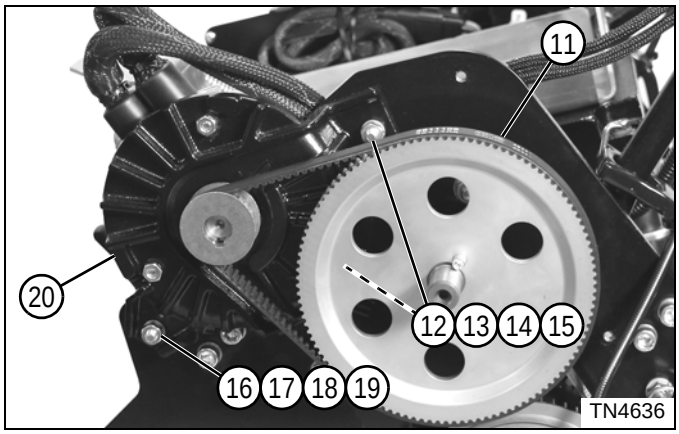

Figure 4-60

6. Install traction motor and mount assembly (20) and transfer belt (11), using screw (16), flat washer (17), lock washer (18), and nut (19). Do not tighten at this time.
7. Install two screws (12), flat washers (13), lock washers (14), and nuts (15).
8. Adjust transfer belt tension. (See “Traction Drive Belt Tension Check and Adjustment” on page 5-5.)

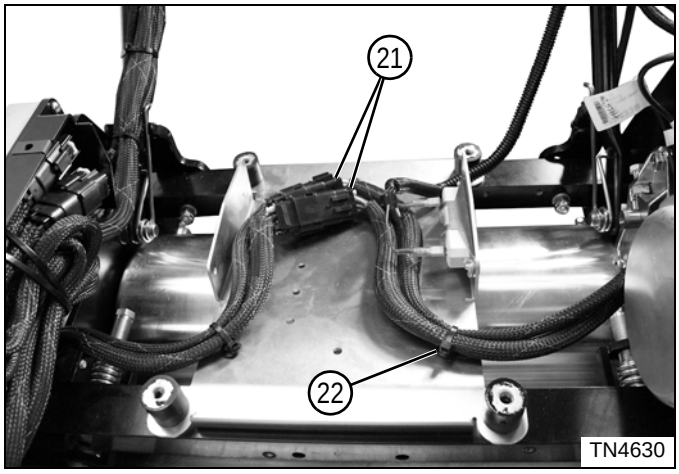

Figure 4-61

9. Install new cable tie (22).

NOTE

Do NOT apply dielectric grease or any lubricant to traction motor harness connectors.

10. Connect traction motor harness connectors (21).
11. Tighten all hardware.
12. Install traction drive belt cover. (See “Traction Drive Belt Cover” on page 5-7.)
13. For battery pack powered mowers, install power module. (See “Battery Tray and Power Module Mount” on page 4-69.)
14. For gen-set powered mowers, install engine. (See “Engine” on page 3-4.)

Throttle Potentiometer

Removal and Installation

See Figure 4-62.

Required Materials
Dielectric Grease (Jacobsen PN 365422)

1. Park the mower safely. (See “Park Mower Safely” on page 1-5.)
2. Remove handle cover. (See “Handle Cover” on page 6-4.)
3. Remove handle and Operator Presence Control (OPC) bail. (See “Handle and OPC Bail” on page 6-8.)

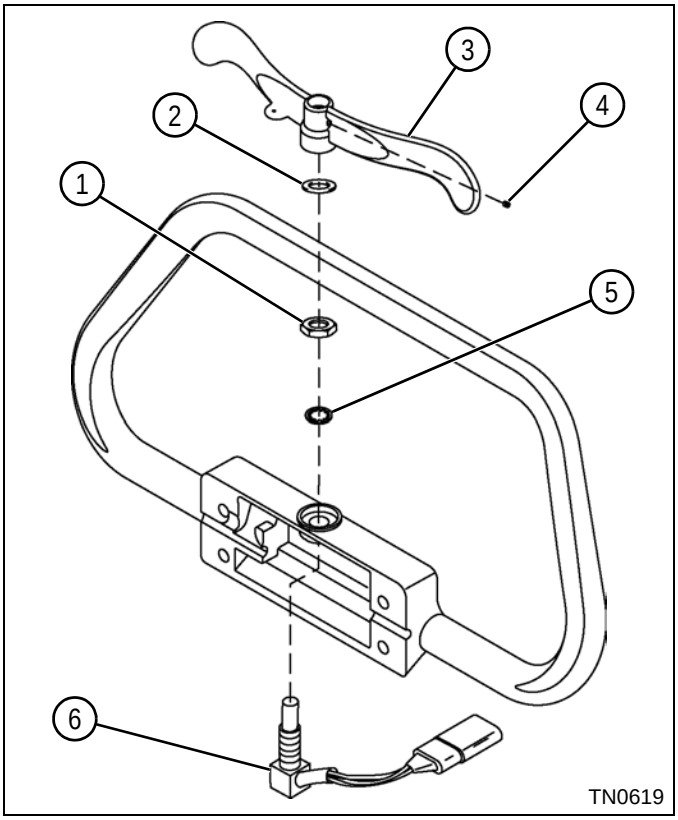

Figure 4-62

4. Loosen set screw (4). Remove speed paddle (3) and spring washer (2).
5. Remove jam nut (1), star washer (5), and potentiometer (6).

Installation Notes

- *Install potentiometer by reversing the order of removal.*
- *Apply dielectric grease (Jacobsen PN 365422) to any connectors removed.*

Main Control Unit

Removal and Installation

See Figure 4-63.

Required Materials
Dielectric Grease (Jacobsen PN 365422)

1. Park the mower safely. (See “Park Mower Safely” on page 1-5.)
2. Remove handle cover. (See “Handle Cover” on page 6-4.)

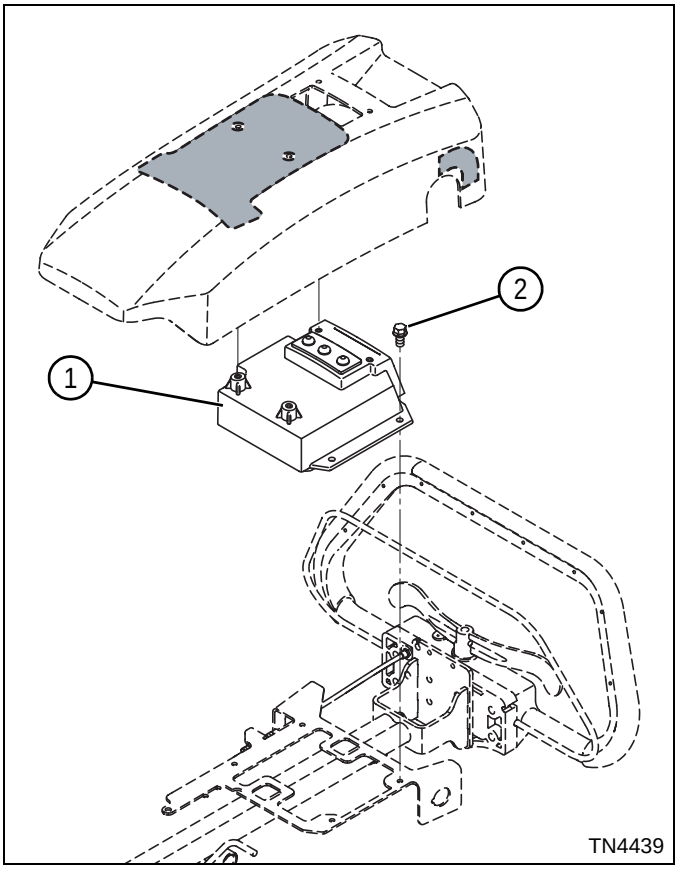

Figure 4-63

3. Remove four screws (2).

NOTE

Label all wires before disconnecting to ensure correct installation.

4. Disconnect wire harness connectors from main control unit (1).

Installation Notes

- *Install main control unit by reversing the order of removal.*
- *Apply dielectric grease (Jacobsen PN 365422) to any connectors removed.*

Reel Control Unit

Removal and Installation

See Figures 4-64 and 4-65.

Required Materials
Dielectric Grease (Jacobsen PN 365422)

1. Park the mower safely. (See “Park Mower Safely” on page 1-5.)

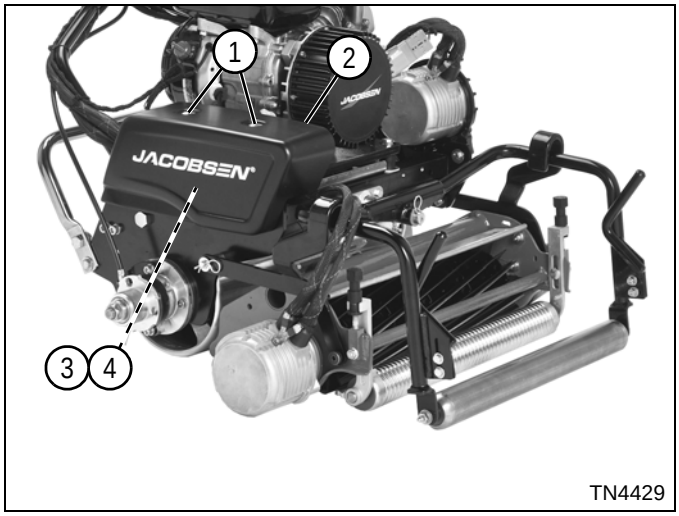

Figure 4-64

NOTE

Label all wires before disconnecting to ensure correct installation.

2. Remove screws (1) and motor controller cover (2), and disconnect reel motor wire harness connectors (3 and 4) at the reel control unit.

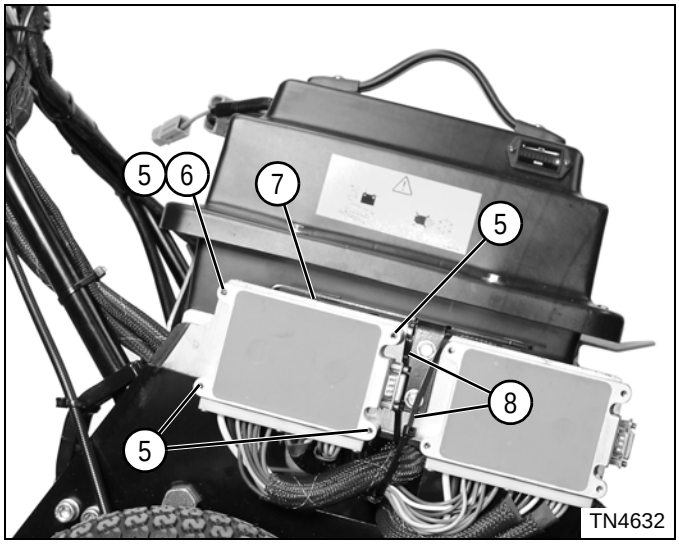

Figure 4-65

3. Cut cable ties (8).
4. Remove four screws (5) and one internal-tooth lock washer (6), and remove reel control unit (7).

Installation Notes

- *Install reel control unit by reversing the order of removal.*
- *Do NOT apply dielectric grease or any lubricant to reel motor harness connectors.*
- *Use new cable ties.*

Traction Control Unit

Removal and Installation

See Figures 4-66 through 4-68.

Required Materials
Dielectric Grease (Jacobsen PN 365422)

1. Park the mower safely. (See “Park Mower Safely” on page 1-5.)

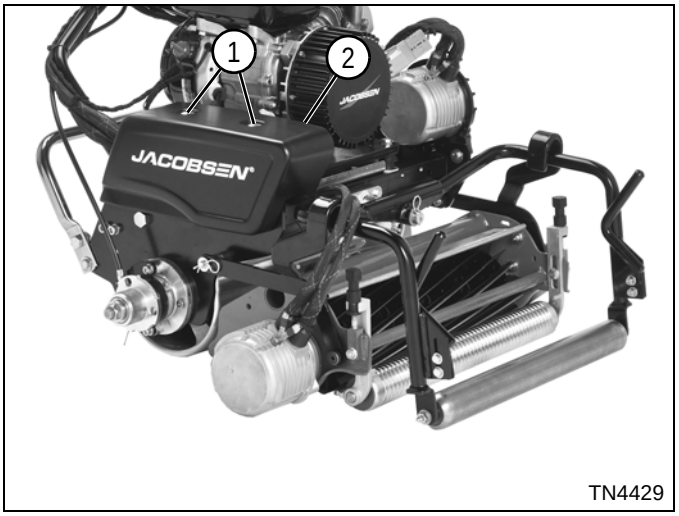

Figure 4-66

2. Remove screws (1) and motor controller cover (2).
3. For battery pack powered mowers, remove power module. (See “Battery Tray and Power Module Mount” on page 4-69.)
4. For gen-set powered mowers, remove engine. (See “Engine” on page 3-4.)

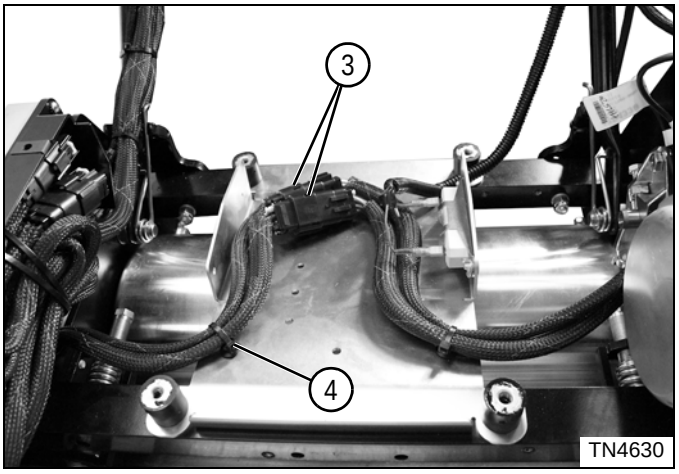

Figure 4-67

5. Cut cable tie (4).

NOTE

Label all wires before disconnecting to ensure correct installation.

6. Disconnect traction control unit harness connectors (3).

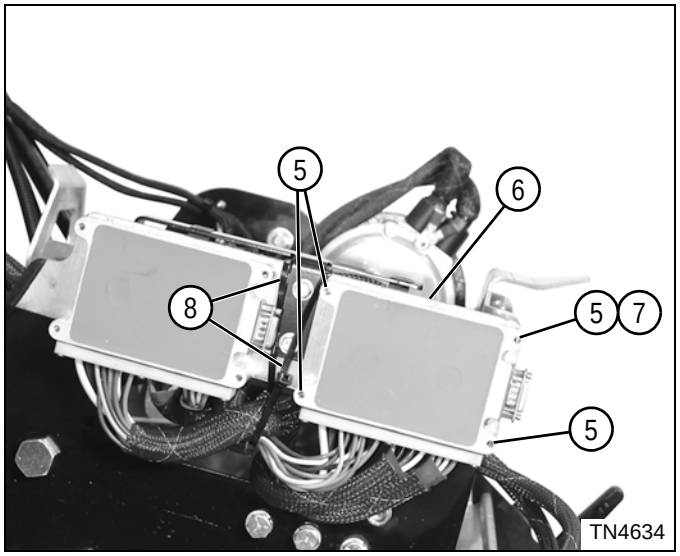

Figure 4-68

7. Cut cable ties (8).
8. Remove four screws (5) and one internal-tooth lock washer (7), and remove traction control unit (6).

Installation Notes

- *Install traction control unit by reversing the order of removal.*
- *Do NOT apply dielectric grease or any lubricant to traction motor harness connectors.*
- *Use new cable ties.*

Battery Tray and Power Module Mount

Removal

See Figure 4-69.

1. Park the mower safely. (See “Park Mower Safely” on page 1-5.)
2. Remove battery pack. (See “Battery Pack” on page 4-56.)

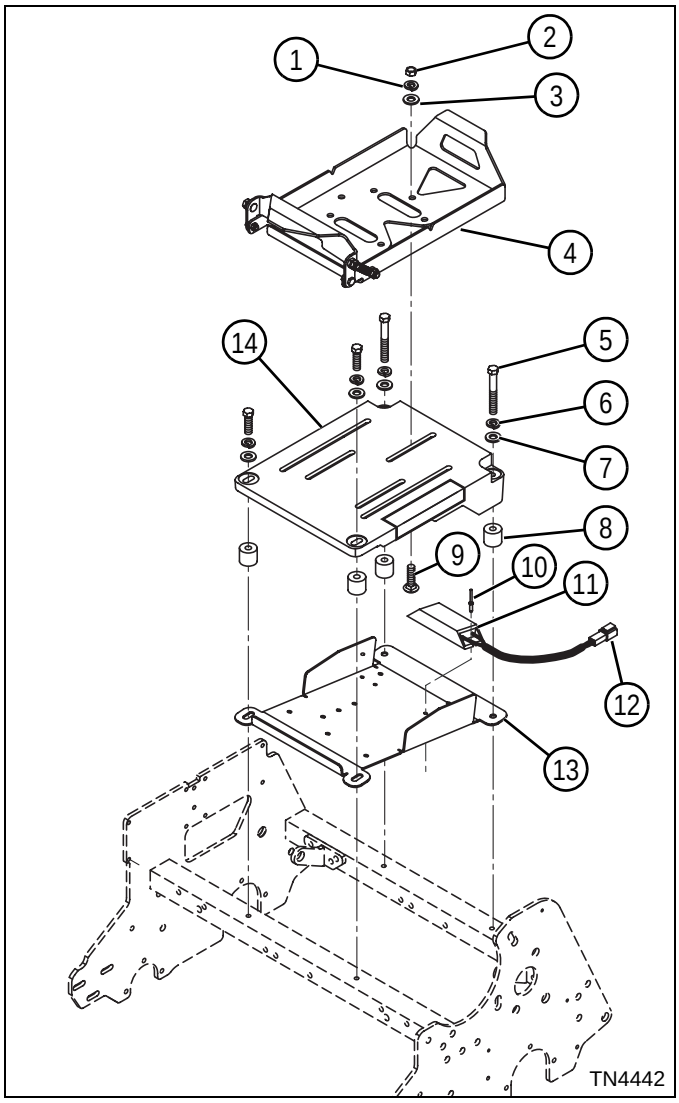

Figure 4-69

NOTE

3. Label all wires before disconnecting to ensure correct installation.

4. Disconnect harness connector (12).
5. Loosen the three nuts (2) and slide battery tray (4) to gain access to the four screws (5).
6. Remove four screws (5), lock washers (6), flat washers (7), power module mount (14), spacers (8), and power module mounting plate (13).
7. Remove two rivets (10) and remove ceramic resistor (11) from power module mounting plate (13).
8. Remove three nuts (2), lock washers (1), flat washers (3), and carriage bolts (9).
9. Remove battery tray (4) from power module mount (14).

Disassembly and Assembly

See Figure 4-70.

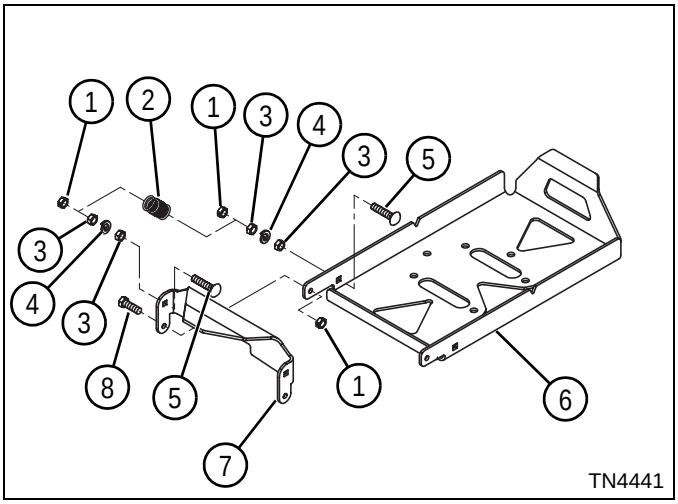

1	Lock Nut (6)	5	Carriage Bolt (4)
2	Extension Spring (2)	6	Battery Tray
3	Nut (8)	7	Clip
4	Lock Washer (4)	8	Screw (2)

Figure 4-70

Assembly Note

Inspect extension springs for wear prior to assembly.

Installation

Required Materials
Dielectric Grease (Jacobsen PN 365422)

Installation Notes

- *Install battery tray and power module mount by reversing the order of removal.*
- *Apply dielectric grease (Jacobsen PN 365422) to any connectors removed.*

Bail Potentiometer

Removal and Installation

See Figure 4-71.

Required Materials
Dielectric Grease (Jacobsen PN 365422)

1. Park the mower safely. (See “Park Mower Safely” on page 1-5.)
2. Remove handle cover. (See “Handle Cover” on page 6-4.)

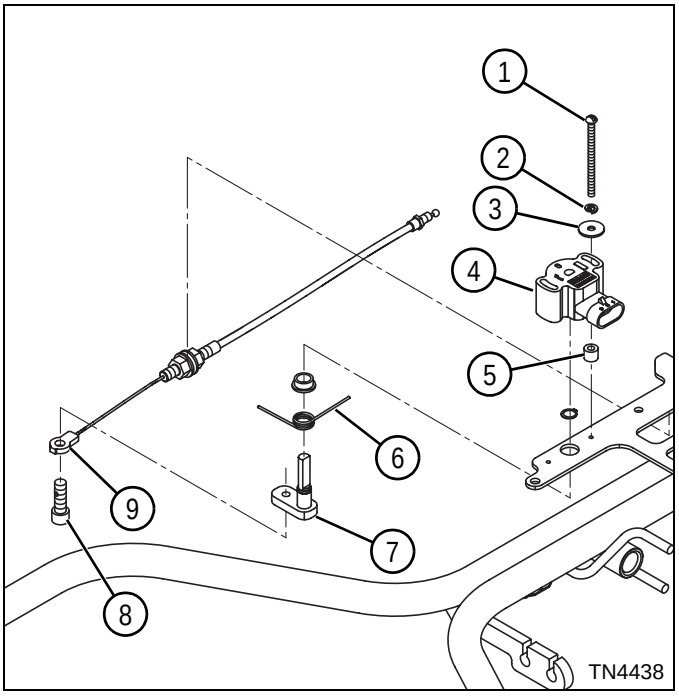

Figure 4-71

3. Remove screw (8) and OPC cable end (9) from pivot arm (7).

NOTE

Label all wires before disconnecting to ensure correct installation.

4. Disconnect wire harness connector from bail potentiometer (4).

NOTE

Note orientation and position of torsion spring (6) before removing pivot arm from bail potentiometer.

5. Using a punch, carefully drive pivot arm (7) out of bail potentiometer (4).
6. Remove two screws (1), lock washers (2), flat washers (3), spacers (5), and bail potentiometer (4).

Installation Notes

- *Install bail potentiometer by reversing the order of removal.*
- *Apply dielectric grease (Jacobsen PN 365422) to any connectors removed.*
- *Be sure bail potentiometer is not binding before tightening fasteners. Check for free range of movement after tightening.*
- *Calibrate bail lever. (See “Bail Lever Calibration” on page 4-43.)*

Chapter 5

Power Train

Specifications **5-2**
Check and Adjustment Specifications 5-2
Component Location **5-3**
Troubleshooting **5-4**
Checks and Adjustments **5-5**
Traction Drive Belt Tension Check and Adjustment 5-5
Repair **5-7**
Traction Drive Belt Cover 5-7
Traction Drive Belts 5-7
Traction Drive Drum and Bearing Housing Assembly 5-10
Traction Drum Left Bearing Housing 5-11
Traction Drum Right Bearing Housing 5-13
Traction Drum Assembly 5-16
Differential Assembly 5-17

5

JACOBSEN
A Textron Company

Specifications

Check and Adjustment Specifications

Specification		
Traction Drive (Transfer) Belt Maximum Deflection with 3.5–6.3 lb (15.6–28.0 N) of Force Applied at the Midpoint between Pulleys	in. (mm)	0.14 (3.5)
Traction Drive (Final) Belt Maximum Deflection with 12.5–15.2 lb (55.6–67.6 N) of Force Applied at the Midpoint between Pulleys	in. (mm)	0.10 (2.5)

Component Location

See Figure 5-1.

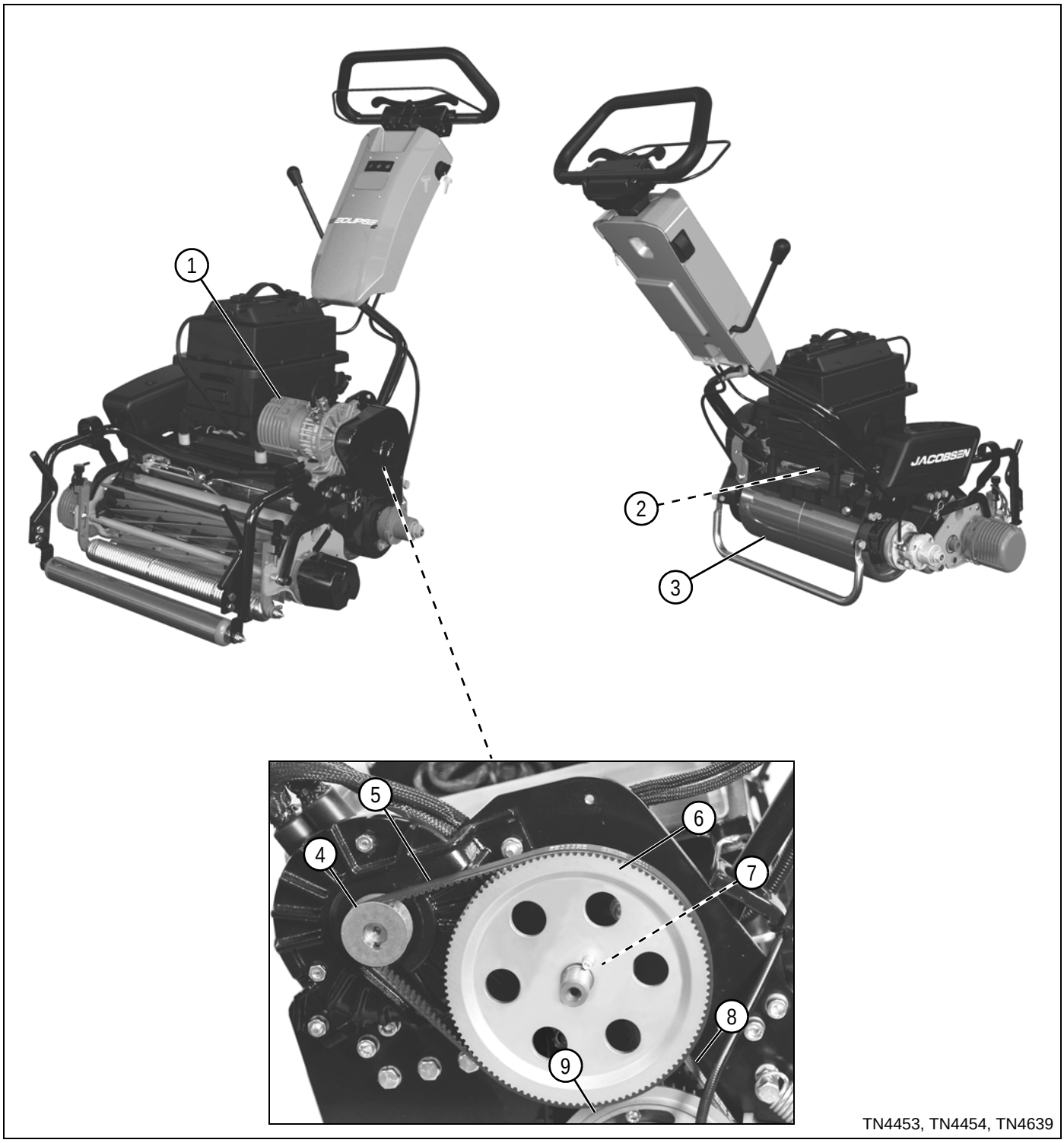

1 Traction Motor
2 Traction Motor Harness Connector
3 Traction/Drum/Differential Assembly
4 Traction Motor Pulley
5 Traction Drive Belt (Transfer)
6 Traction Drive (Outer Transfer) Pulley
7 Traction Drive (Inner Transfer) Pulley
8 Traction Drive Belt (Final Drive)
9 Traction Drive (Traction Drum) Pulley

Figure 5-1: Power Train Component Location

Troubleshooting

Condition	Probable Cause	Remedy
Traction drive does not engage when OPC bail is engaged.	System voltage too low.	Check battery pack voltage.
	Park brake engaged.	Release park brake. (Refer to Operator's Manual.)
	Speed paddle setting is too low.	Increase machine speed. (Refer to Operator's Manual)
	OPC cable damaged.	Replace OPC cable. (See "OPC Cable" on page 6-10.)
	OPC rotary switch malfunction.	Check OPC rotary switch. (See "Bail Potentiometer Test" on page 4-55.)
	Traction drive belts not tensioned properly.	Adjust traction drive belt tension. (See "Traction Drive Belt Tension Check and Adjustment" on page 5-5.)
	Traction drive belts worn, stretched, or damaged.	Replace drive belt(s). (See "Traction Drive Belts" on page 5-7.)
	Key damaged or missing on traction motor shaft.	Repair or replace key as needed. (See "Traction Motor" on page 4-63.)
	Key damaged or missing on traction drum shaft pulley.	Repair or replace key as needed. (See "Traction Drive Drum and Bearing Housing Assembly" on page 5-10.)
	Traction drum differential damaged.	Repair or replace differential assembly.
Traction drive does not reach full speed.	Traction drive belts not tensioned properly.	Check traction drive belt tension. (See "Traction Drive Belts" on page 5-7.)
	Traction drive belts worn, stretched, or damaged.	Replace drive belt(s). (See "Traction Drive Belts" on page 5-7.)
Traction drive pulls to one side.	Traction drum differential damaged.	Repair or replace differential assembly. (See "Differential Assembly" on page 5-17.)
	Park brake cable not adjusted properly or not fully releasing.	Adjust park brake cable. (See "Park Brake Check and Adjustment" on page 7-4.)
	Traction drum bearing binding, worn, or damaged.	Replace traction drum bearing. (See "Traction Drive Drum and Bearing Housing Assembly" on page 5-10 and "Traction Drum Left Bearing Housing" on page 5-11 or "Traction Drum Right Bearing Housing" on page 5-13.)

Checks and Adjustments

Traction Drive Belt Tension Check and Adjustment

Check Procedure

See Figures 5-2 and 5-3.

NOTICE

To prevent damage to the belts, do not twist, fold, bend, or overtighten the belts.

1. Park the mower safely. (See “Park Mower Safely” on page 1-5.)
2. Remove the traction drive belt cover. (See “Traction Drive Belt Cover” on page 5-7.)

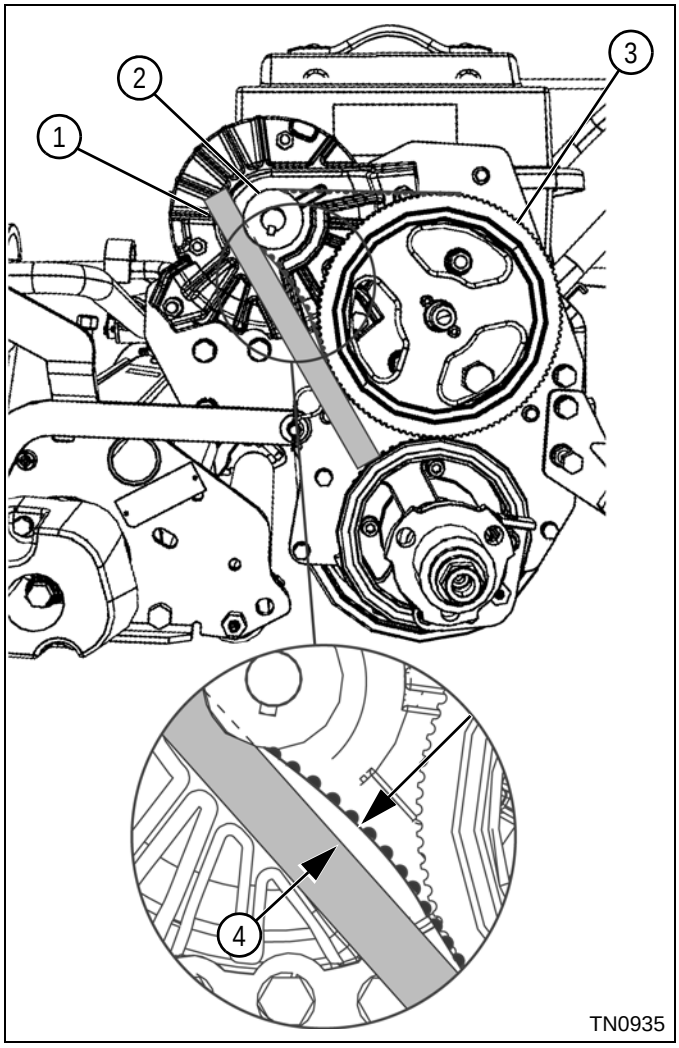

Figure 5-2

3. Place a straightedge (1) against the traction drive outer (transfer) pulley (3) and traction motor drive pulley (2).
4. Apply approximately 3.5–6.3 lb (15.6–28.0 N) of force at the midpoint of the traction drive (transfer) belt. The belt should deflect 0.14 in. (3.5 mm) (4).

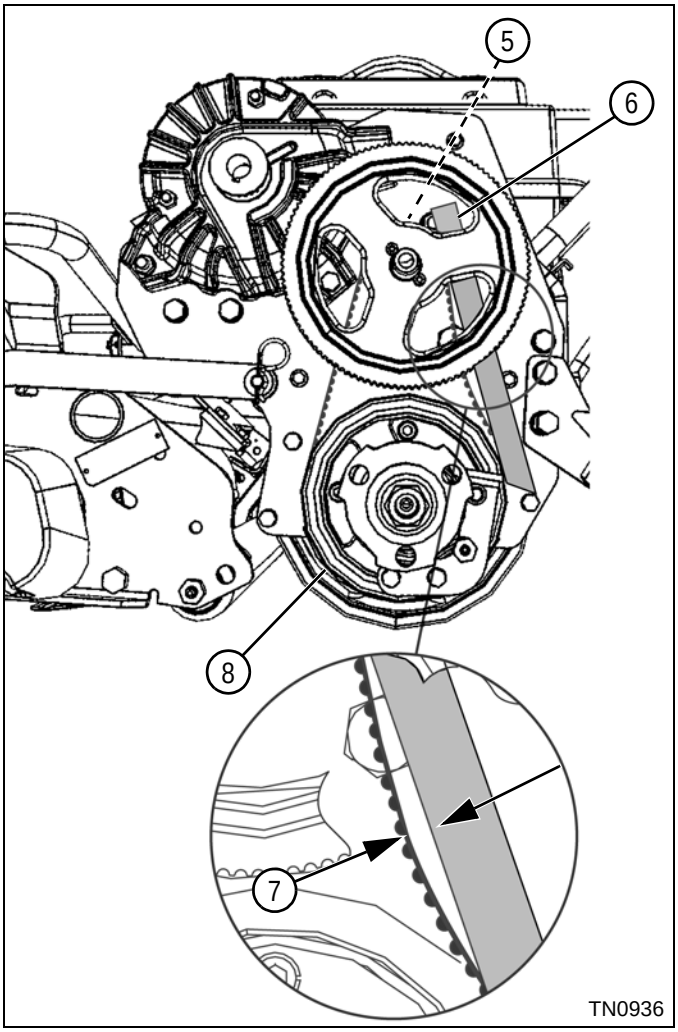

Figure 5-3

5. Place a straightedge (6) against the traction drive inner (transfer) pulley (5) and traction drive (traction drum) pulley (8).
6. Apply approximately 12.5–15.2 lb (55.6–67.6 N) of force at the midpoint of the traction drive (final drive) belt. The belt should deflect 0.10 in. (2.5 mm) (7).

Are both belts within specification?

YES *No adjustment is necessary. Install the traction drive belt cover. (See “Traction Drive Belt Cover” on page 5-7.)*

NO *Proceed to “Adjustment Procedure.”*

Adjustment Procedure

See Figures 5-4 and 5-5.

Required Tools and Materials
• Height-of-Cut Gauge Bar • 5/16-18 x 1" Hex Screw • 5/16-18 Hex Nut

NOTE

Minor adjustments to the traction drive (transfer) belt can be made by pivoting the traction motor mount assembly. If belt cannot be tensioned to specification, proceed with the following procedure.

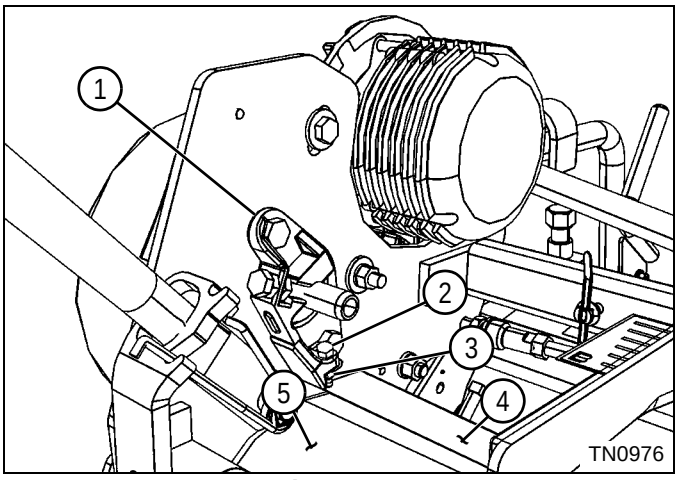

Figure 5-4

1. Install a 5/16-18 x 1" hex screw (2) and nut (3) in the bottom of the bearing bracket (1).
2. Place the height-of-cut gauge bar (4) between the traction drum (5) and hex screw (2).

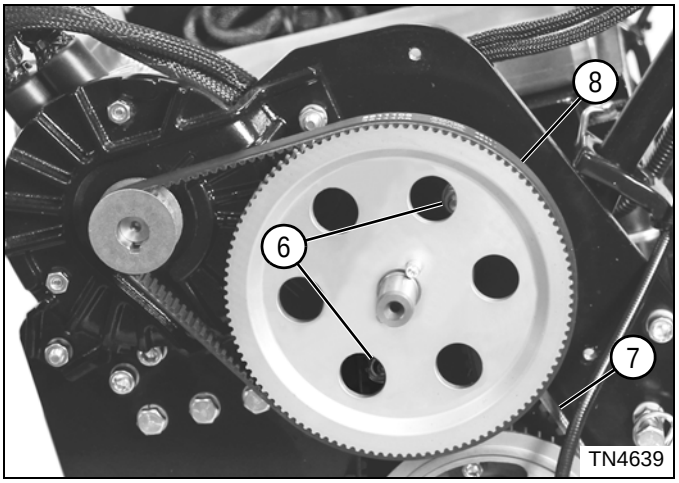

Figure 5-5

3. Loosen nuts (6).
4. Tighten hex screw (2) until the traction drive (final drive) belt (7) deflects 0.10 in. (2.5 mm) when 12.5–15.2 lb (55.6–67.6 N) of force is applied at the midpoint of the belt.
5. Tighten hex screw (2) until the traction drive (transfer) belt (8) deflects 0.14 in. (3.5 mm) when 3.5–6.3 lb (15.6–28.0 N) of force is applied at the midpoint of the belt.
6. Tighten nuts (6).
7. Remove the height-of-cut gauge bar (4), hex screw (2), and nut (3).
8. Install the traction drive belt cover. (See “Traction Drive Belt Cover” on page 5-7.)

Repair

Traction Drive Belt Cover

Removal and Installation

See Figure 5-6.

1. Park the mower safely. (See “Park Mower Safely” on page 1-5.)
2. Remove transport wheels (if equipped). (See “Transport Wheels (Optional)” on page 9-2.)
3. Remove wheel hubs and bearings. (See “Wheel Hubs and Bearings” on page 9-3.)

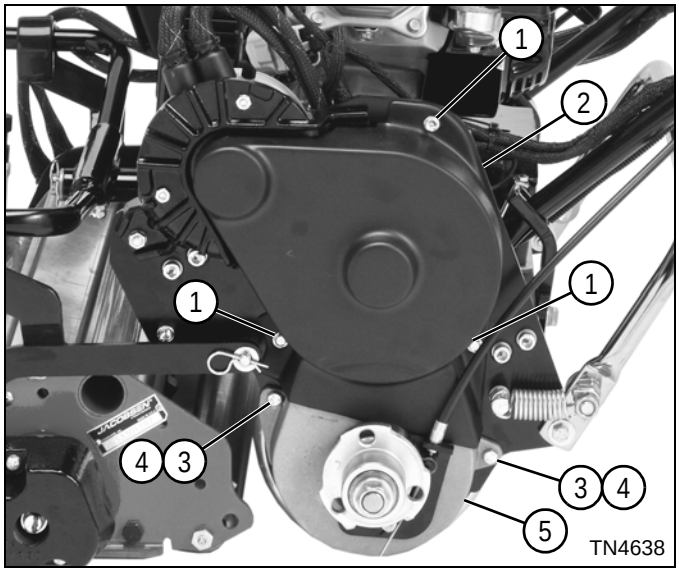

Figure 5-6

4. Remove three screws (1) and upper belt cover (2).
5. Remove two screws (3), lock washers (4), and lower belt cover (5).

Installation Note

Install traction drive belt cover by reversing the order of removal.

Traction Drive Belts

Removal

See Figures 5-7 and 5-8.

1. Park the mower safely. (See “Park Mower Safely” on page 1-5.)
2. Remove the traction drive belt cover. (See “Traction Drive Belt Cover” on page 5-7.)

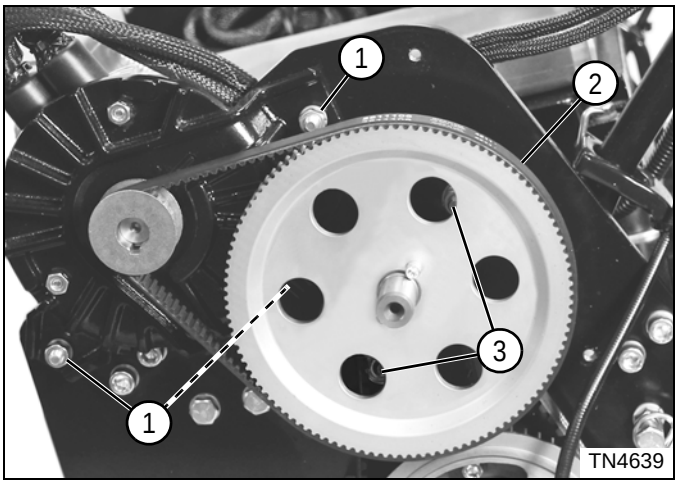

Figure 5-7

3. Loosen traction motor mount screws (1) and remove traction drive (transfer) belt (2).
4. Loosen bearing bracket nuts (3).

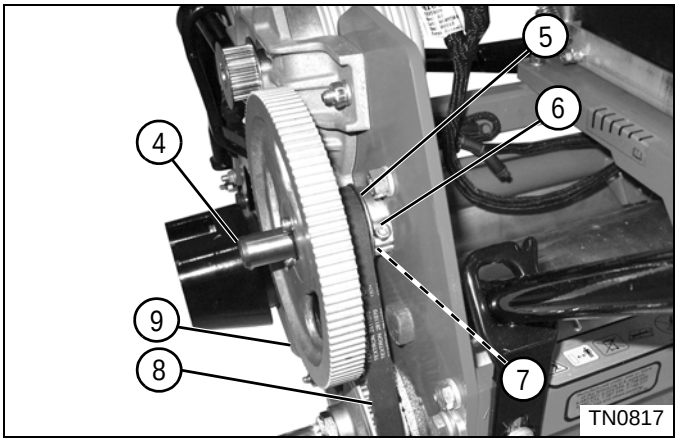

Figure 5-8

NOTE

Record the number of shims used (if any) to ensure correct installation.

5. Loosen screw (6) and remove outer transfer pulley (9), inner transfer pulley (5), shaft (4), and shims (7) as an assembly.
6. Remove traction drive (final drive) belt (8).

Component Inspection

See Figures 5-9 through 5-11.

Outer Transfer Pulley

Required Materials
Lubriplate® Marine Grease

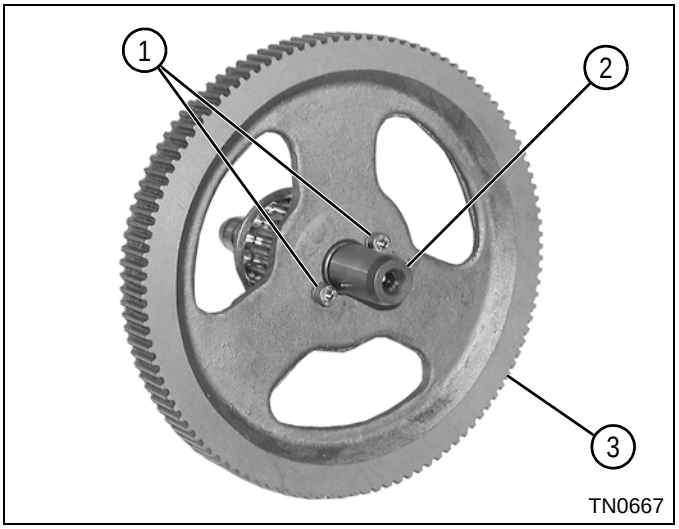

Figure 5-9

1. Remove screws (1) and slide shaft (2) out of outer transfer drive pulley (3).

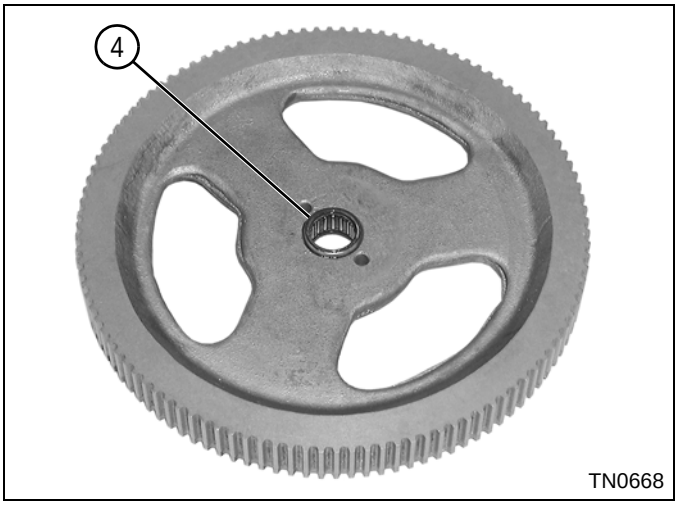

Figure 5-10

2. Inspect the needle bearing (4) for signs of wear or damage. Replace as needed.
3. Lubricate the bearings with Lubriplate® Marine Grease before installing the pulley on shaft.

Inner Transfer Pulley

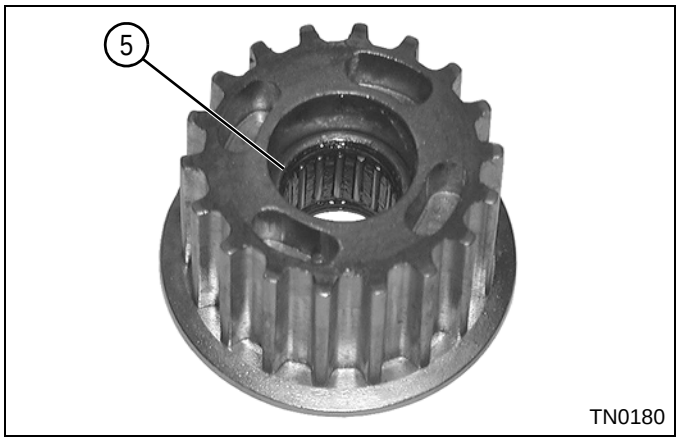

Figure 5-11

4. Inspect the needle bearing (5) for signs of wear or damage. Replace as needed.
5. Lubricate the bearing with Lubriplate® Marine Grease before installing the pulley on shaft.

Installation

See Figures 5-12 through 5-15.

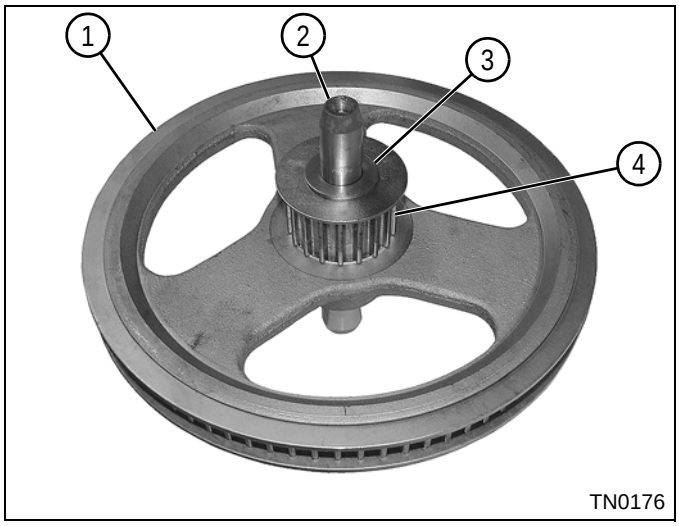

Figure 5-12

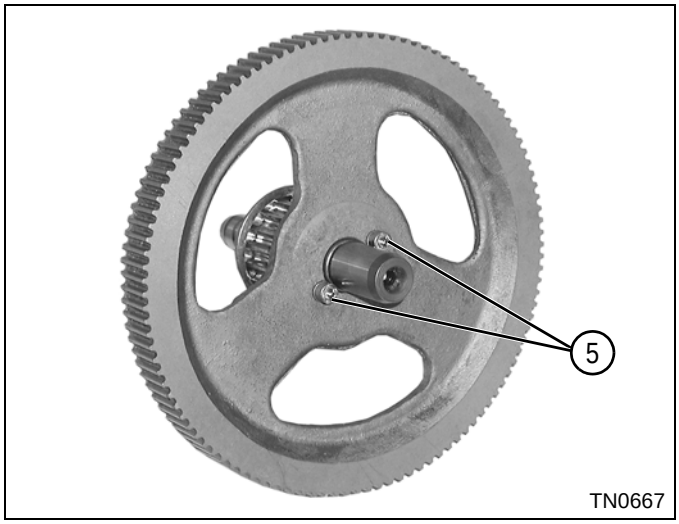

Figure 5-13

1. Assemble the outer transfer pulley (1), inner transfer pulley (4), shims (3), and shaft (2), using screws (5).

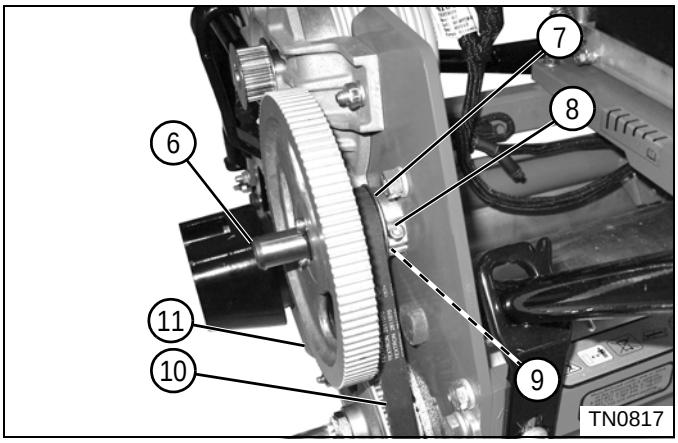

Figure 5-14

2. Install traction drive (final drive) belt (10).

NOTE

Be sure to guide traction drive (final drive) belt (10) over inner transfer pulley (7) while installing transfer pulley/shaft assembly.

3. Install shims (9), inner transfer pulley (7), outer transfer pulley (11), and shaft (6) as an assembly.
4. Tighten screw (8).

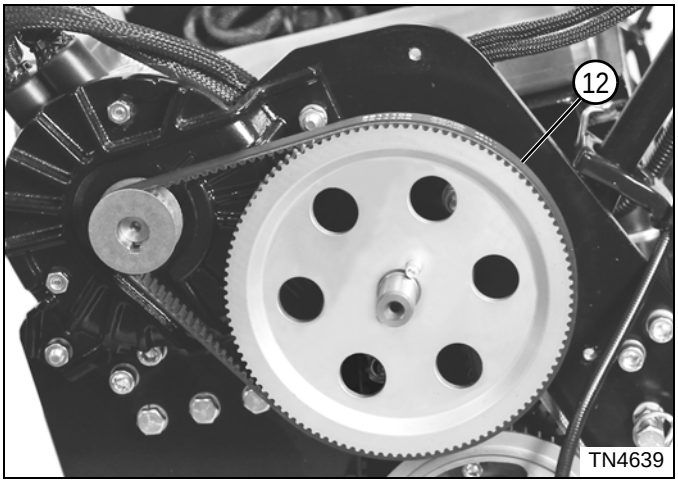

Figure 5-15

5. Install traction drive (transfer) belt (12).
6. Adjust the belt tension. (See “Traction Drive Belt Tension Check and Adjustment” on page 5-5.)
7. Install traction drive belt cover. (See “Traction Drive Belt Cover” on page 5-7.)
8. Install left-side hub and bearing. (See “Wheel Hubs and Bearings” on page 9-3.)

Traction Drive Drum and Bearing Housing Assembly

Removal and Installation

See Figures 5-16 through 5-19.

1. Park the mower safely. (See “Park Mower Safely” on page 1-5.)
2. Remove traction drive belts. (See “Traction Drive Belts” on page 5-7.)
3. Remove right-side brake band. (See “Park Brake Band” on page 7-8.)

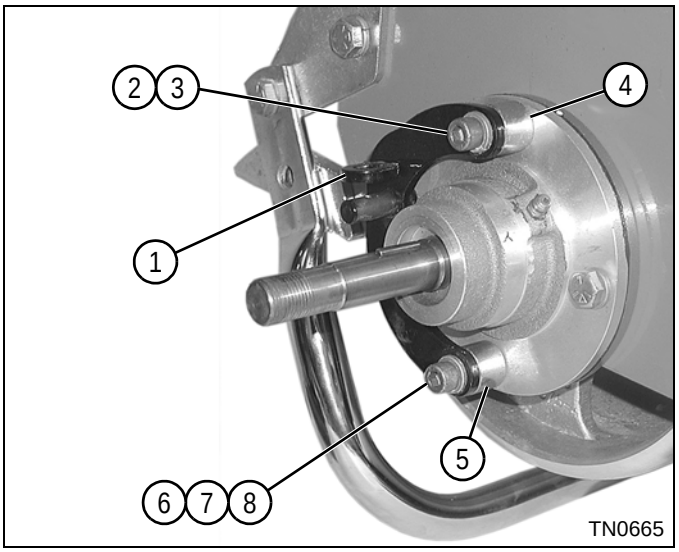

Figure 5-16

4. Remove screw (6), lock washer (7), spacer (5), and nut (8) from the brake bracket (1).
5. Remove screw (2), lock washer (3), and spacer (4), and remove brake bracket (1).

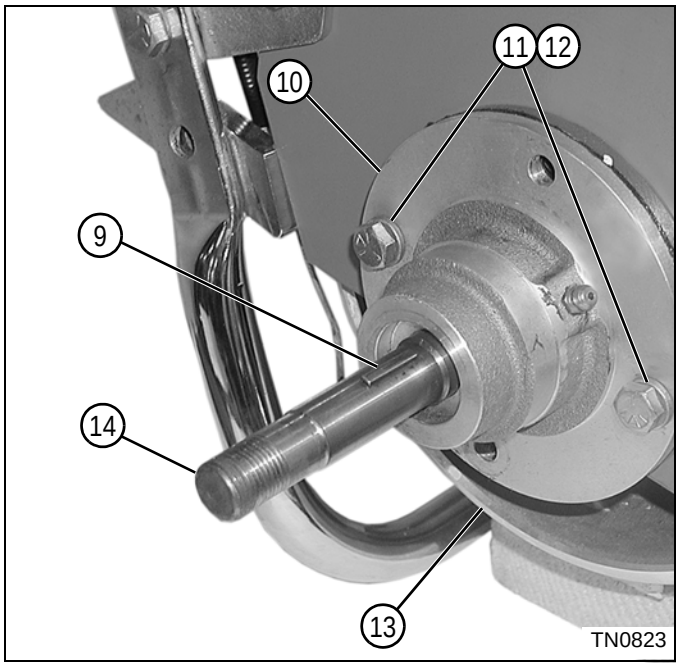

Figure 5-17

6. Support the traction drive drum (13).
7. Remove key (9) from traction drum shaft (14).
8. Remove two screws (11) and lock washers (12) from bearing housing (10).

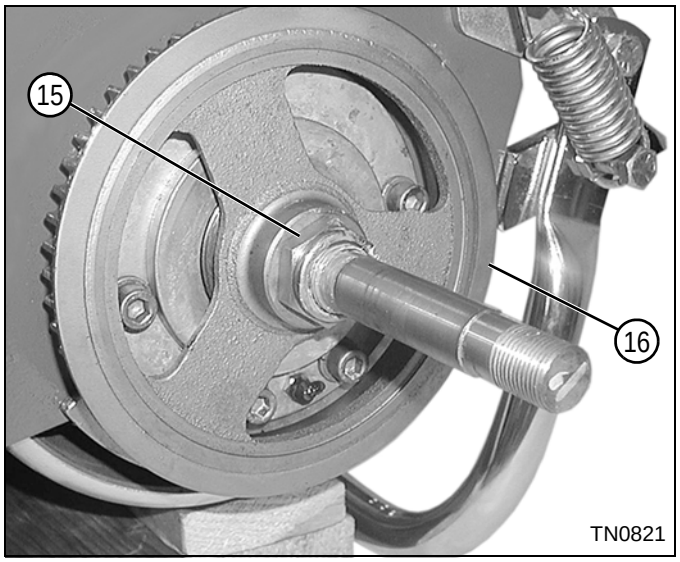

Figure 5-18

9. Remove nut (15) and pulley (16).

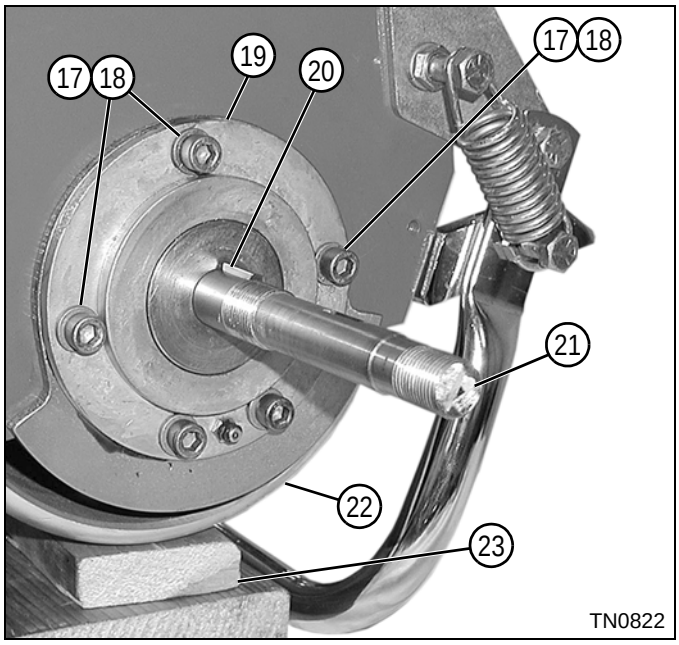

Figure 5-19

10. Remove key (20) from traction drum shaft (21).
11. Remove three screws (17) and lock washers (18) from bearing housing (19).
12. Remove support blocks (23) and lower the traction drum assembly (22).
13. Lift the mower and remove the traction drum assembly (22).

Installation Note

Install traction drive drum and bearing housing assembly by reversing the order of removal.

Traction Drum Left Bearing Housing

Removal

See Figures 5-20 through 5-24.

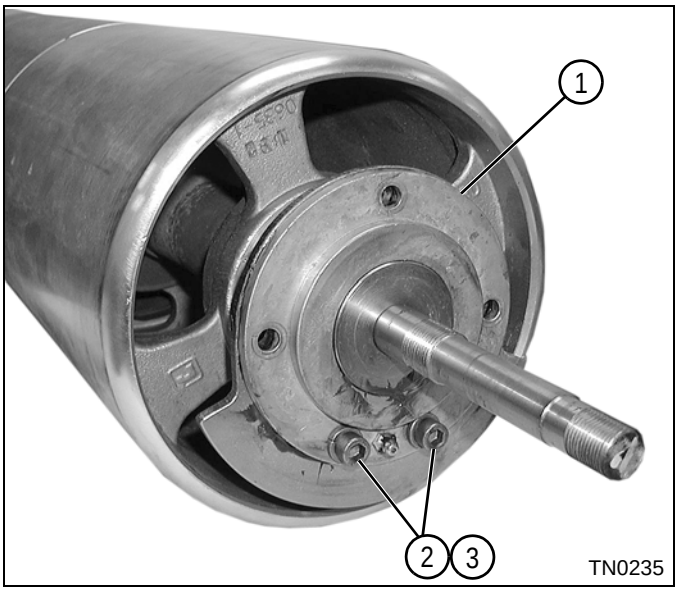

Figure 5-20

1. Remove two screws (2) and lock washers (3), and remove the seal cover (1).

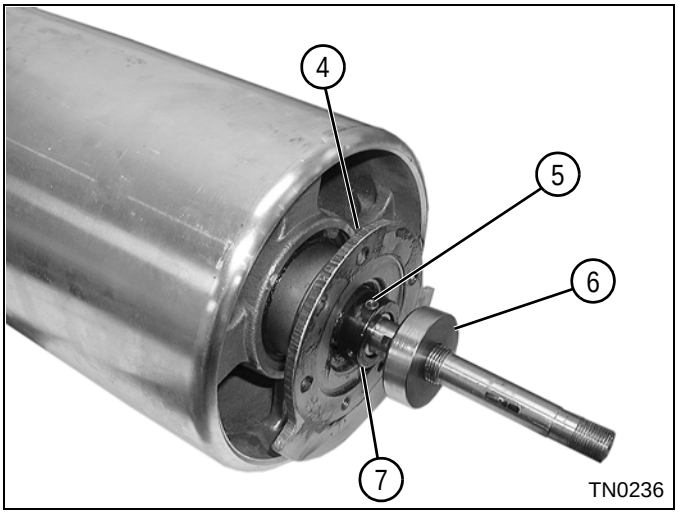

Figure 5-21

2. Remove spacer (6).
3. Loosen set screw (5) and remove locking collar (7).
4. Remove bearing housing (4).

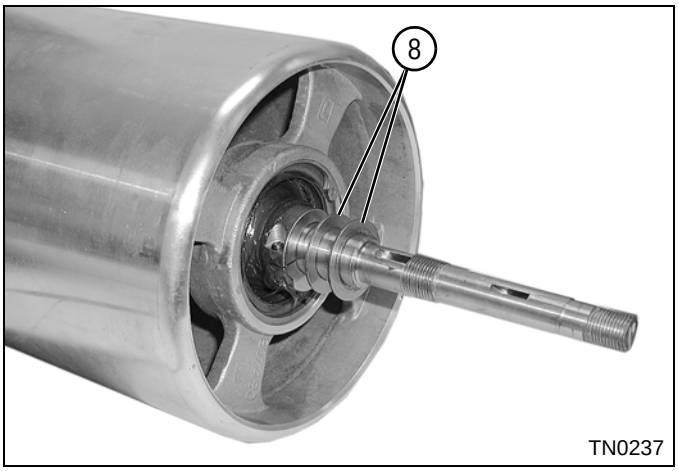

Figure 5-22

5. Remove two washers (8).

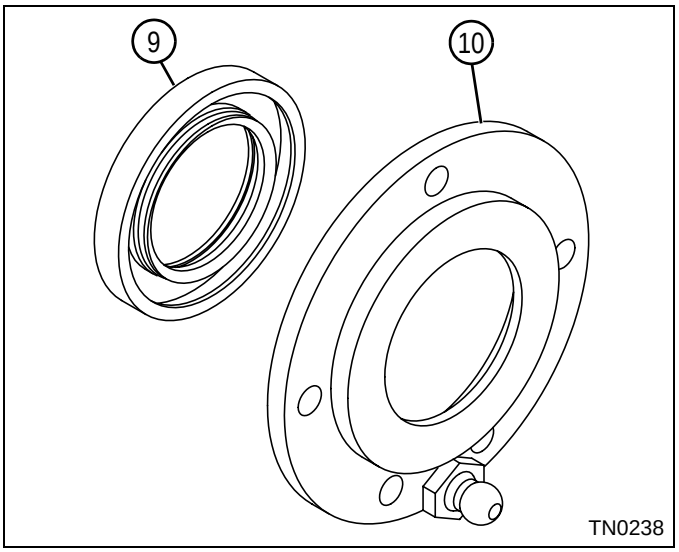

Figure 5-23

6. Remove grease seal (9) from the seal cover (10).

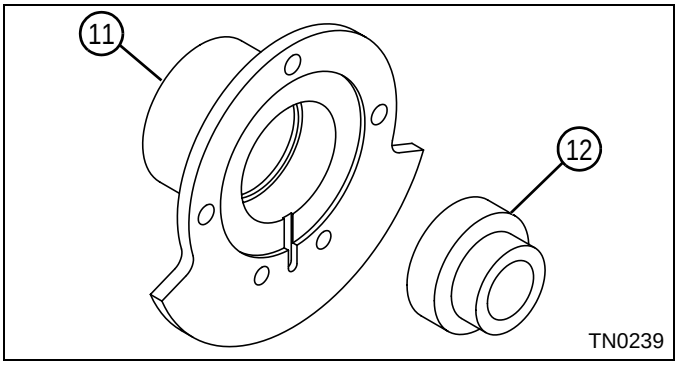

Figure 5-24

7. Inspect bearing (12) for wear or damage. Remove the bearing from the bearing housing (11) only if it is necessary to replace the bearing.

Installation

See Figures 5-25 through 5-29.

Required Materials
Loctite® Aviation Gasket Sealer (Loctite PN 30516)

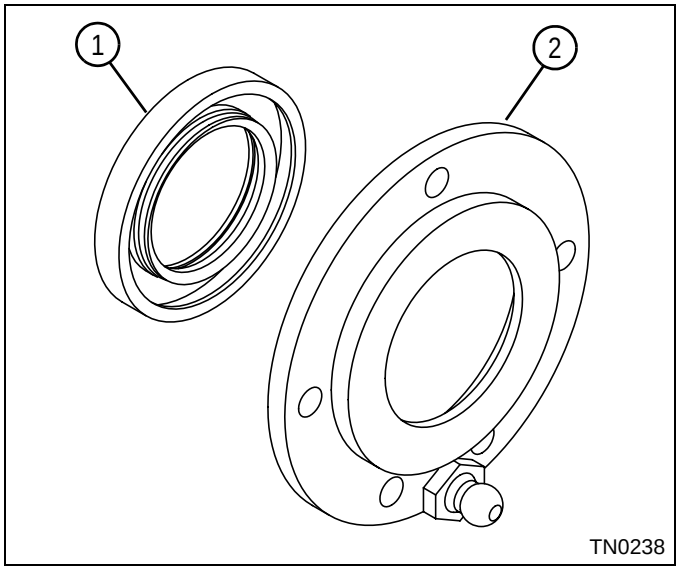

Figure 5-25

1. Install a new grease seal (1) in the seal cover (2).

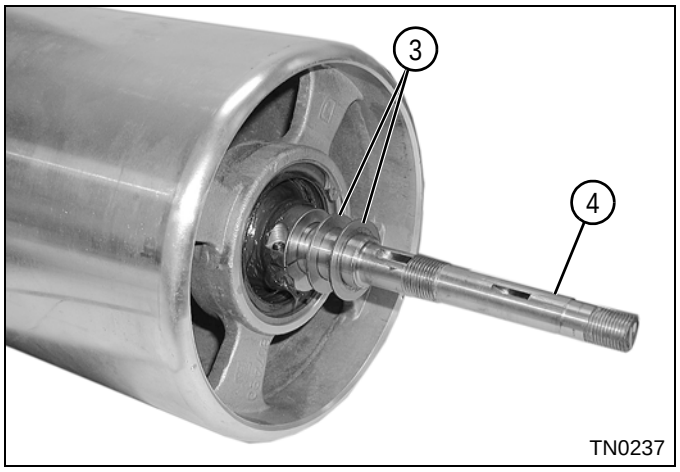

Figure 5-26

2. Install two washers (3) on the traction drum shaft (4).

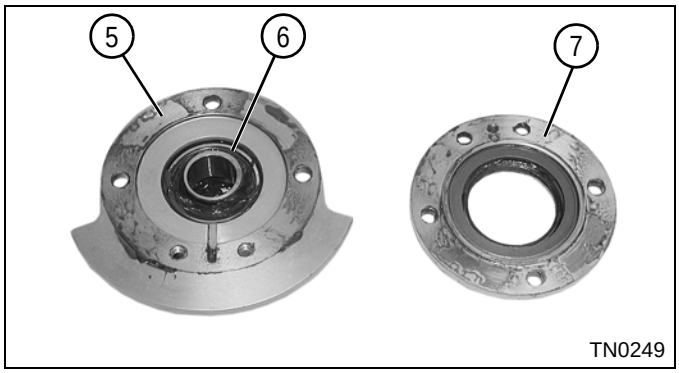

Figure 5-27

3. Clean the mating surfaces of the seal cover (7) and bearing housing (5), and apply a thin film of Loctite® Aviation Gasket Sealer to the mating surfaces.
4. Pack bearing (6) with grease that meets or exceeds NLGI Grade 2 LB specifications before installation.

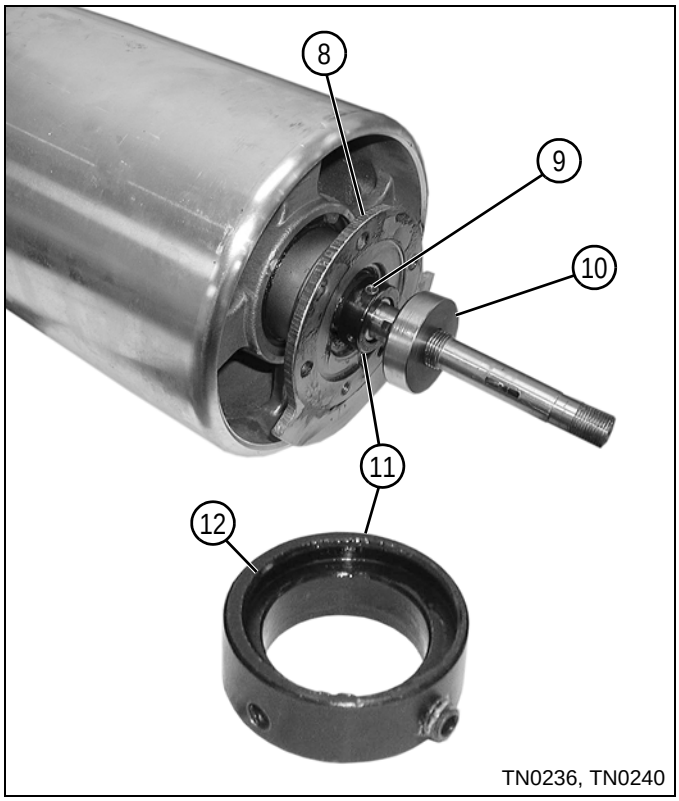

Figure 5-28

5. Install bearing housing (8).
6. Install locking collar (11) with the recessed side (12) toward the bearing. Tighten the set screw (9).
7. Install spacer (10).

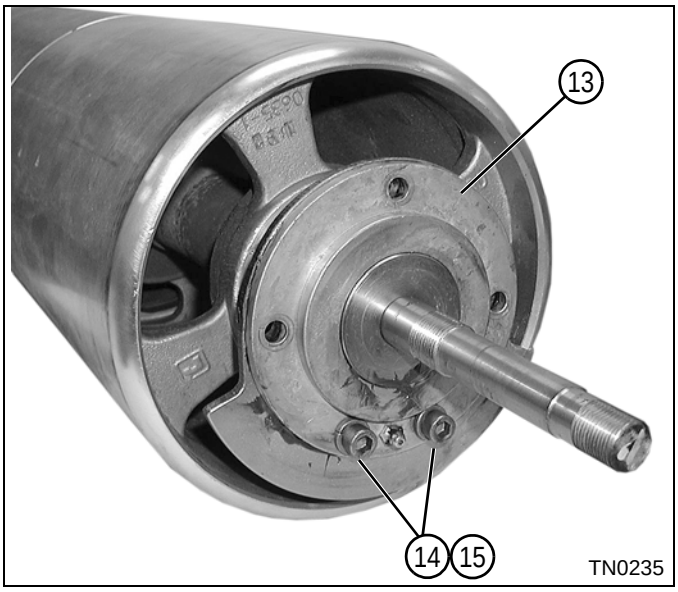

Figure 5-29

8. Install seal cover (13) using two screws (14) and lock washers (15).

Traction Drum Right Bearing Housing

Removal

See Figures 5-30 through 5-34.

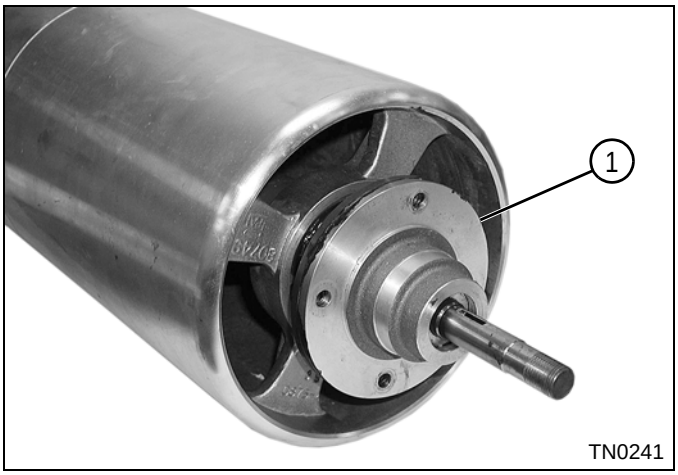

Figure 5-30

1. Remove the seal cover (1).

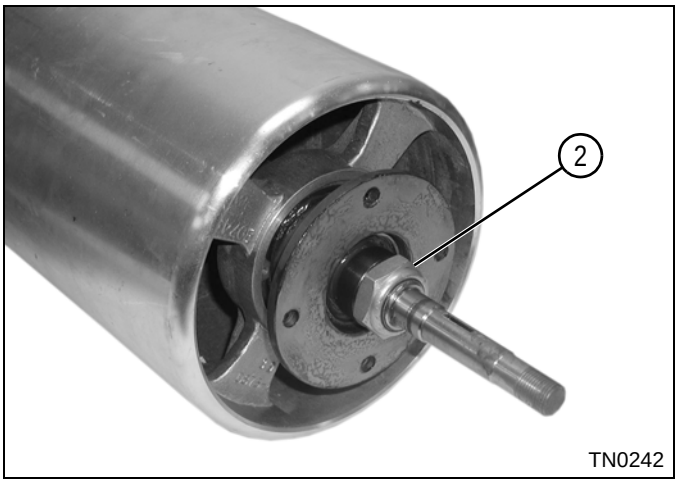

Figure 5-31

2. Remove nut (2).

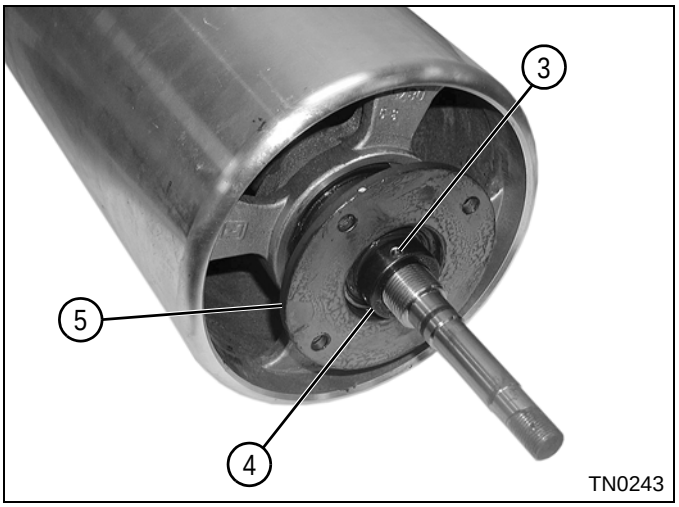

Figure 5-32

3. Loosen set screw (3) and remove the locking collar (4).
4. Remove bearing and housing assembly (5).

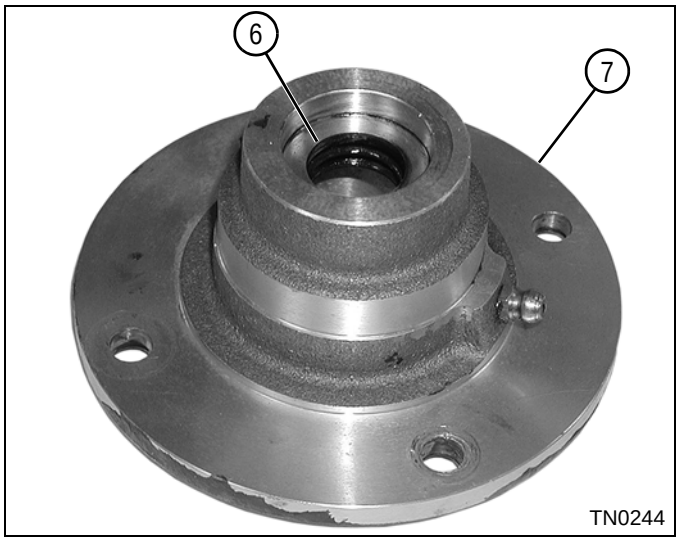

Figure 5-33

5. Remove grease seal (6) from the seal cover (7).

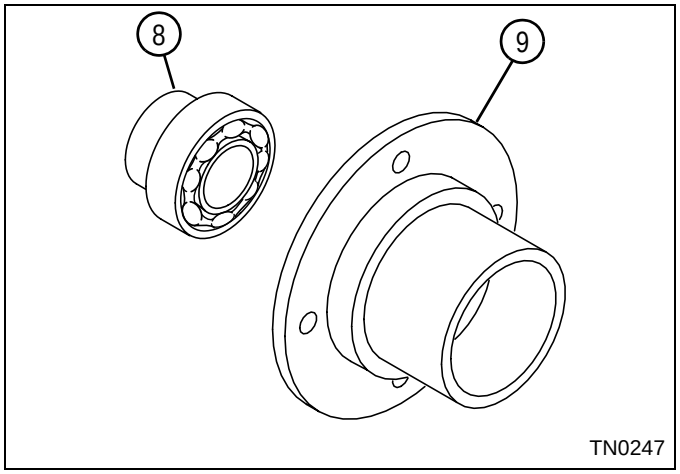

Figure 5-34

6. Inspect bearing (8) for wear or damage. Remove the bearing from the bearing housing (9) only if it is necessary to replace the bearing.

Installation

See Figures 5-35 through 5-39.

Required Materials
Loctite® Aviation Gasket Sealer (Loctite PN 30516)

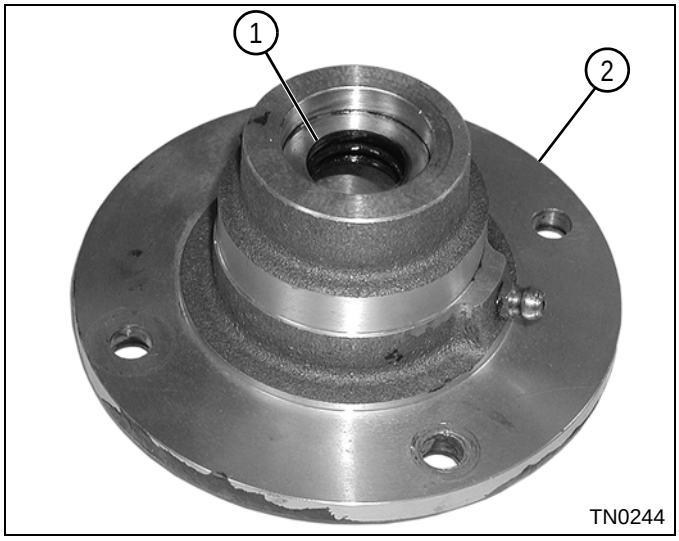

Figure 5-35

1. Install a new grease seal (1) in the seal cover (2).

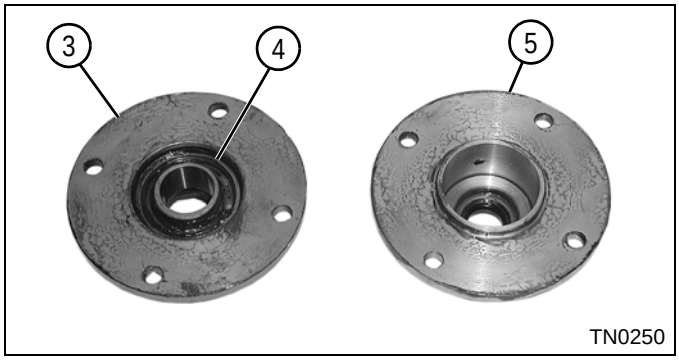

Figure 5-36

2. Clean the mating surfaces of the seal cover (5) and bearing housing (3), and apply a thin film of Loctite® Aviation Gasket Sealer to the surfaces.
3. Pack bearing (4) with grease that meets or exceeds NLGI Grade 2 LB specifications before installation.

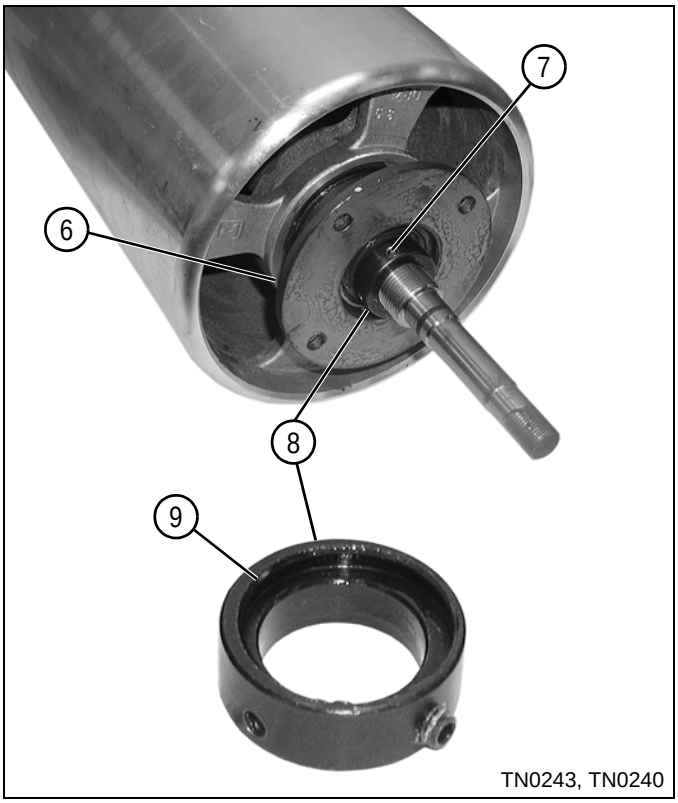

Figure 5-37

4. Install bearing and housing assembly (6).
5. Install locking collar (8) with the recessed side (9) toward the bearing. Tighten the set screw (7).

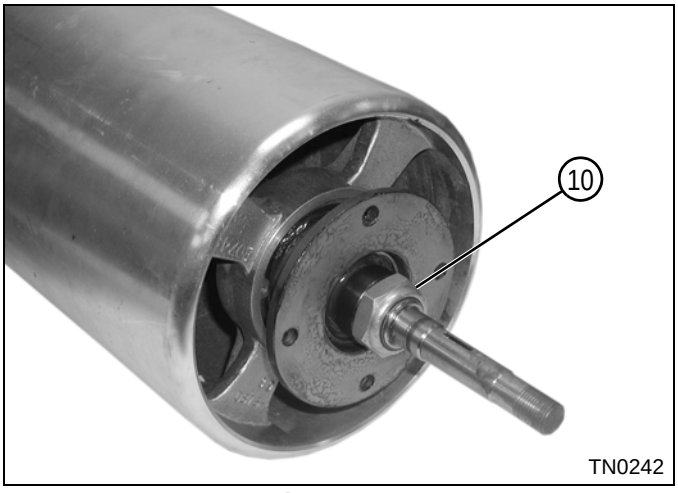

Figure 5-38

6. Install nut (10). Tighten until nut just contacts bearing.

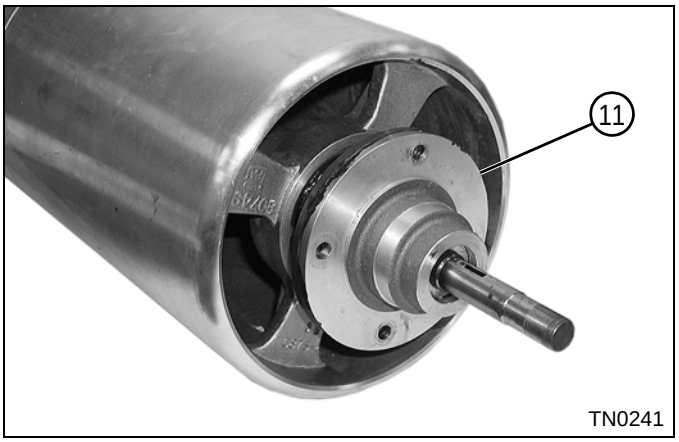

Figure 5-39

7. Install the seal cover (11).

Traction Drum Assembly

Removal and Installation

See Figure 5-40.

NOTE

The right and left traction drum assemblies are removed and installed the same way. Right drum shown.

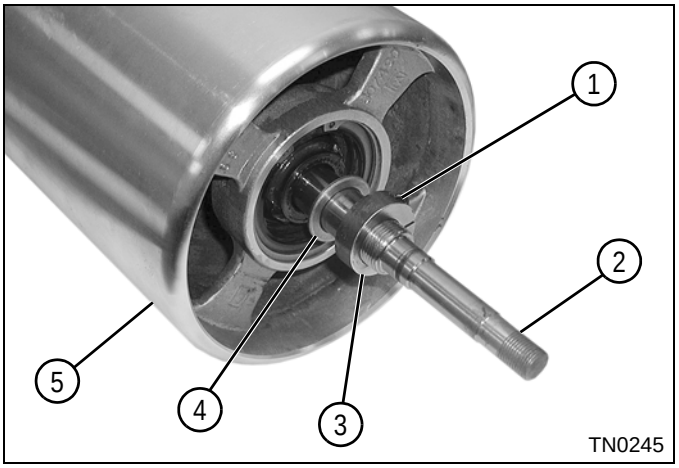

Figure 5-40

1. Loosen the screw (1) and remove locking collar (3) from the traction drum shaft (2).
2. Remove washer (4).
3. Remove drum assembly (5) from traction drum shaft (2).

Installation Notes

- *Install traction drum by reversing the order of removal.*
- *Tighten non-pulley side nut until it just contacts bearing.*
- *Tighten pulley nut to 30–35 lb-ft (40.6–47.4 N·m).*

Disassembly and Assembly

See Figure 5-41.

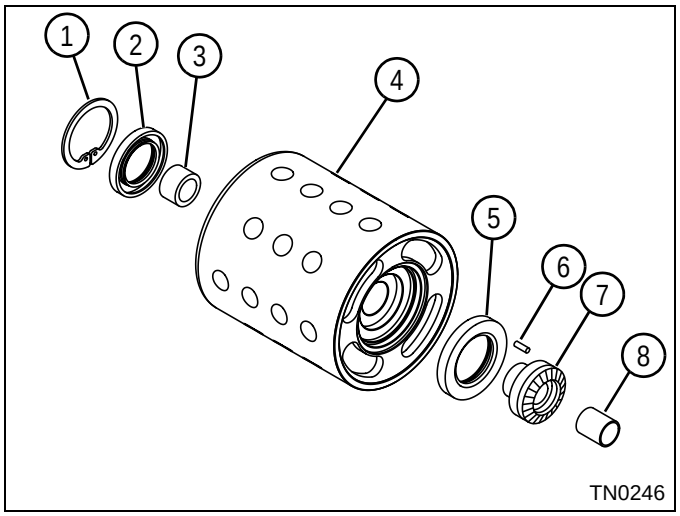

1	Retaining Ring	5	Grease Seal
2	Grease Seal	6	Pin (Press Fit)
3	Bushing (Press Fit)	7	Differential Gear
4	Roller	8	Bushing (Press Fit)

Figure 5-41

1. Remove retaining ring (1), grease seal (2), and bushing (3) from roller (4).
2. Remove differential gear (7) from roller (4).
3. Inspect bushing (8). Replace as needed.
4. Remove grease seal (5).

Assembly Notes

- *Assembly is done by reversing the order of disassembly.*
- *Install new grease seals (2 and 5).*
- *Apply grease that meets or exceeds NLGI Grade 2 LB specifications to the differential gear teeth (7) and bushings (3 and 8) before assembly.*

Differential Assembly

Disassembly and Assembly

See Figure 5-42.

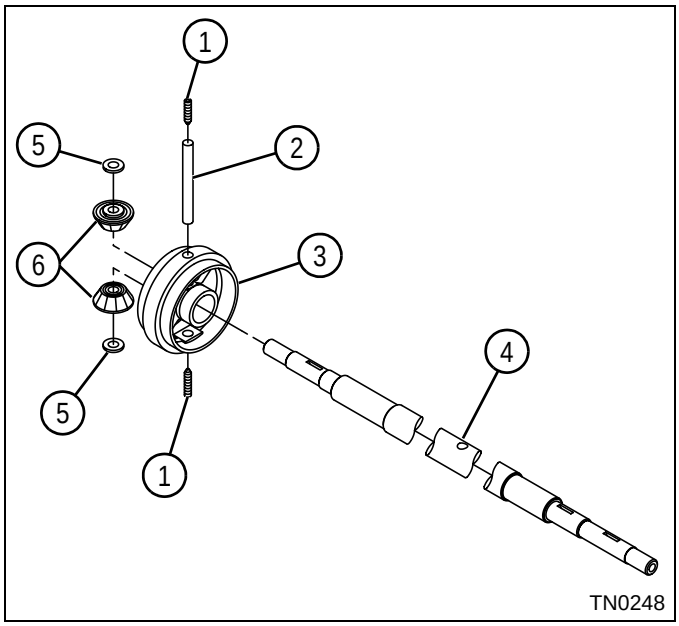

Figure 5-42

1. Remove two set screws (1), pinion shaft (2), two thrust washers (5), and pinion gears (6) from differential (3).
2. Remove differential (3) from the traction drum shaft (4).

Assembly Notes

- *Assembly is done by reversing the order of disassembly.*
- *Apply grease that meets or exceeds NLGI Grade 2 LB specifications to the pinion gear teeth before assembly.*

Chapter 6

Handle and Controls

Checks and Adjustments **6-2**
Operator Presence Control (OPC) Cable Adjustment 6-2
Speed Paddle Stop Adjustment 6-3
Handle Height Adjustment 6-3
Repair **6-4**
Handle Cover 6-4
Handle Assembly 6-5
Handle and OPC Bail 6-8
OPC Cable 6-10
Speed Paddle 6-11
Brake Control Lever 6-11

6

JACOBSEN
A Textron Company

Checks and Adjustments

Operator Presence Control (OPC) Cable Adjustment

See Figures 6-1 and 6-2.

NOTE

Initial OPC cable adjustments are made at the mounting bracket, prior to the OPC cable calibration procedure.

1. Park the mower safely. (See “Park Mower Safely” on page 1-5.)
2. Remove the handle cover. (See “Handle Cover” on page 6-4.)
3. Remove handle. (See “Handle and OPC Bail” on page 6-8.)

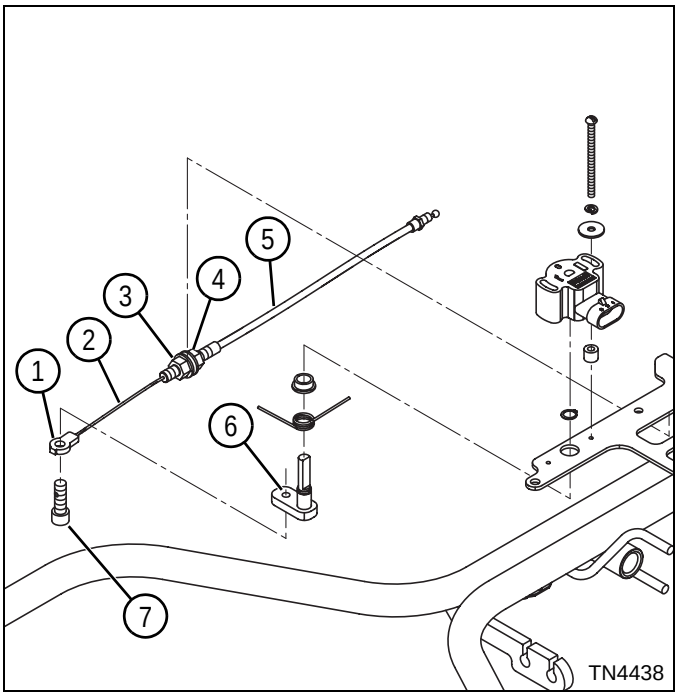

Figure 6-1

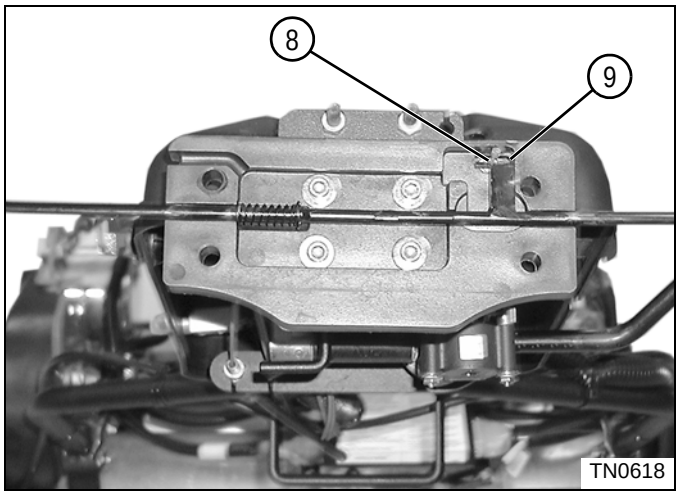

Figure 6-2

4. Remove screw (7).
5. Pull OPC cable (2) until cable end (8) is contacting OPC bail (9).

NOTE

Be sure OPC cable (2) does not move while adjusting cable sheath (5).

6. Loosen nut (3).
7. Using nut (4), adjust cable sheath (5) until cable eyelet (1) aligns with threaded hole in pivot arm (6).
8. Tighten nut (3), and install cable eyelet (1) using screw (7).
9. Install handle. (See “Handle and OPC Bail” on page 6-8.)
10. Install handle cover. (See “Handle Cover” on page 6-4.)
11. Calibrate OPC bail. (See “Bail Lever Calibration” on page 4-43.)

Speed Paddle Stop Adjustment

See Figure 6-3.

1. Park the mower safely. (See “Park Mower Safely” on page 1-5.)

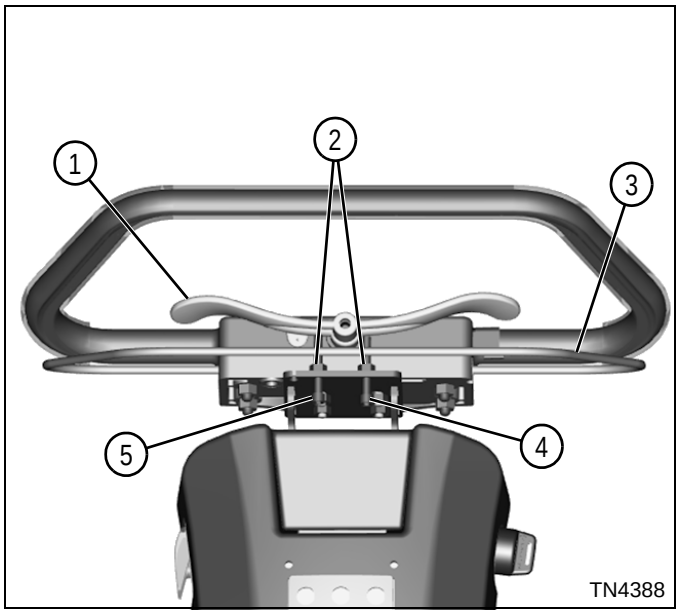

Figure 6-3

2. Loosen nuts (2).
3. Adjust positive paddle stop screw (4) until speed paddle (1) is in a comfortable position, while set at full max (+) speed.
4. Powerup machine and engage Operator Presence Control (OPC) bail (3) and traction drive.
5. Adjust negative paddle stop screw (5) so traction drum rotates as slowly as possible without stopping, while speed paddle is in full slow (–) speed position.
6. Tighten nuts (2), and recheck settings.
7. Calibrate speed paddle. (See “Speed Paddle Calibration” on page 4-43.)

Handle Height Adjustment

See Figure 6-4.

1. Park the mower safely. (See “Park Mower Safely” on page 1-5.)

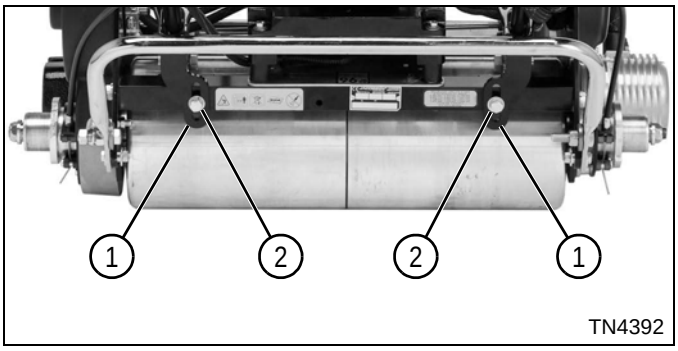

Figure 6-4

2. Loosen screws (2) on both sides of mower and adjust handle stops (1) evenly until desired handle height is obtained.
3. Tighten screws (2).

Repair

Handle Cover

Removal and Installation

Required Materials
Dielectric Grease (Jacobsen PN 365422)

See Figures 6-5 and 6-6.

1. Park the mower safely. (See “Park Mower Safely” on page 1-5.)

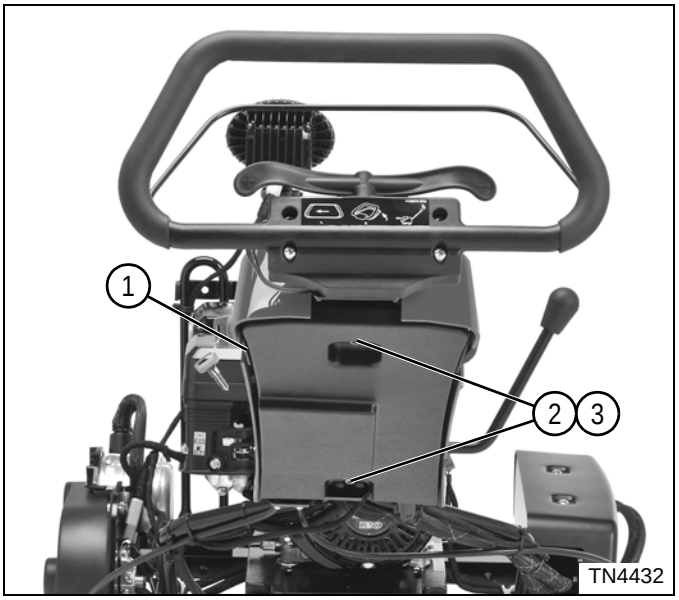

Figure 6-5

2. Remove two nuts (2) and washers (3), and remove rear half of cover (1).

NOTE

Label all wires before disconnecting to ensure correct installation.

3. Disconnect light switch wire terminals (if equipped). (See “Light Switch” on page 4-61.)

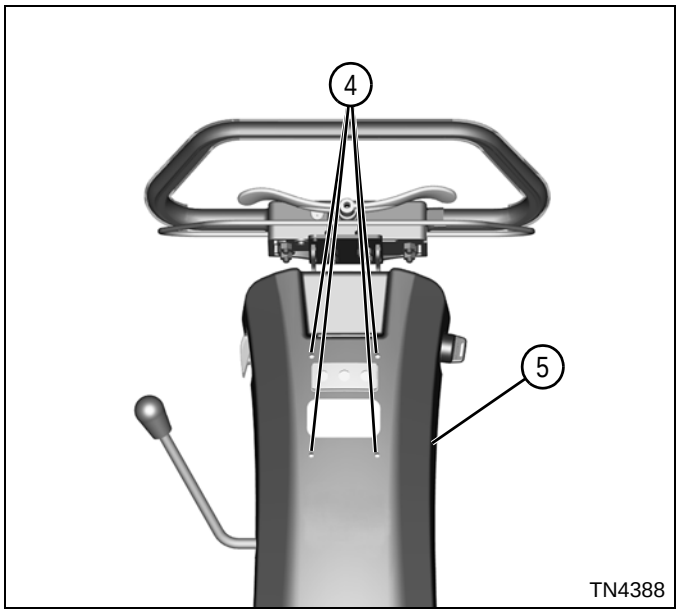

Figure 6-6

4. Remove four screws (4) and front half of handle cover (5).

Installation Notes

- *Install handle cover by reversing the order of removal.*
- *Apply dielectric grease (Jacobsen PN 365422) to any connectors removed.*
- *Align park brake cables and main wire harness with openings in covers before tightening cover screws.*

Handle Assembly

See Figures 6-12 through 6-14.

Required Materials
Dielectric Grease (Jacobsen PN 365422)

Removal and Installation

1. Park the mower safely. (See “Park Mower Safely” on page 1-5.)
2. Disconnect both park brake cables at brake bands. (See “Park Brake Cable” on page 7-6.)
3. Remove handle cover. (See “Handle Cover” on page 6-4.)

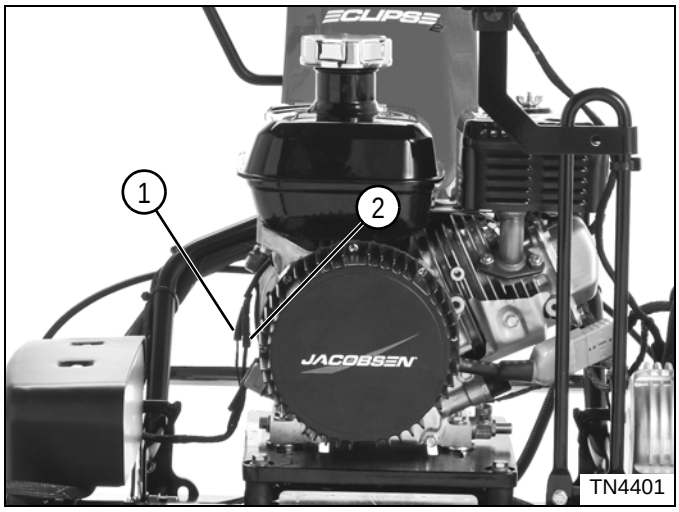

Figure 6-7

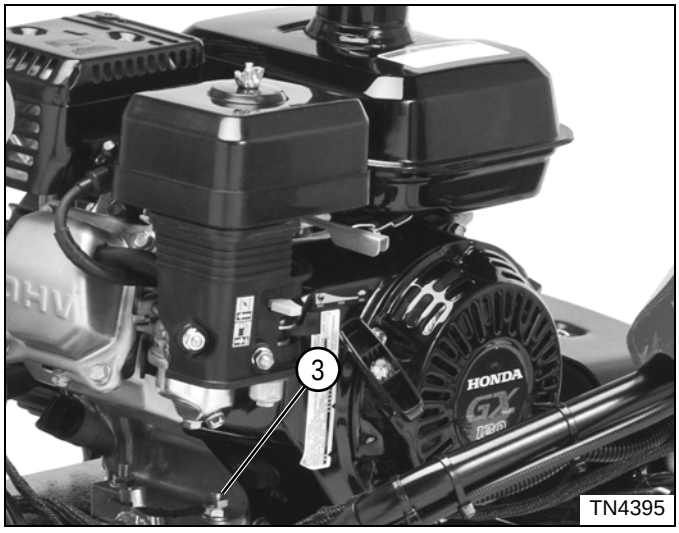

Figure 6-8

NOTE

Label all wires before disconnecting to ensure correct installation.

4. Disconnect engine harness wire connectors (1 and 2) if equipped.
5. Disconnect ground wire ring terminal (3) if equipped.

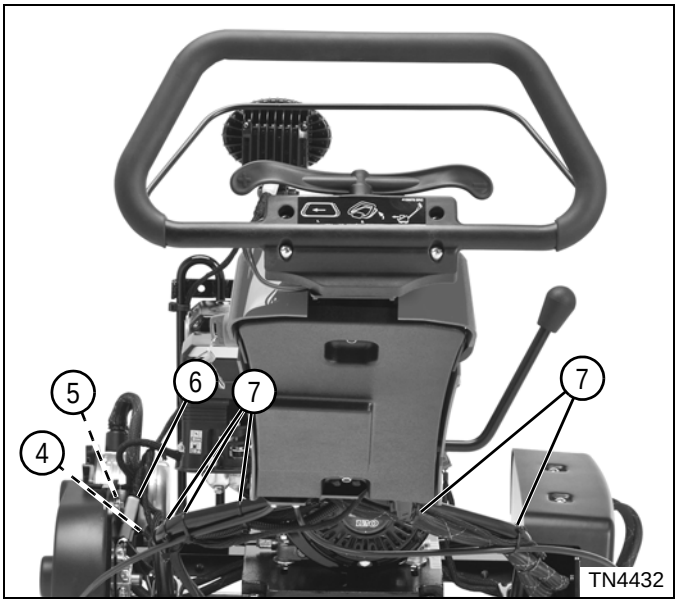

Figure 6-9

6. Disconnect ground wire ring terminal (5) from the frame.
7. Disconnect engine shut off connector (4) if equipped.
8. Disconnect light kit harness connector (6) if equipped.

NOTE

Record position of cable ties before removing to ensure correct installation.

9. Remove cable ties (7).

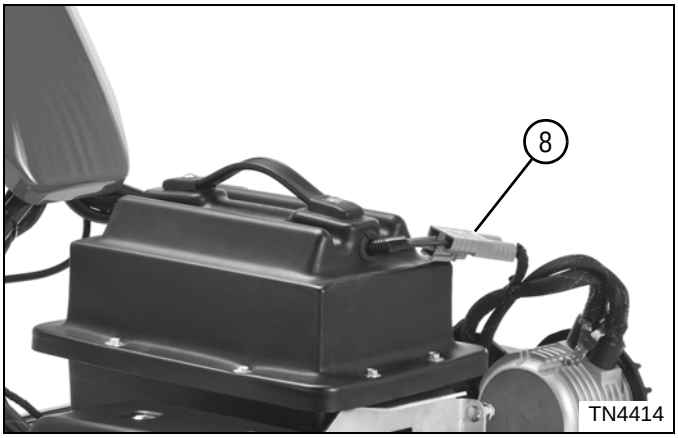

Figure 6-10: Battery Pack Models

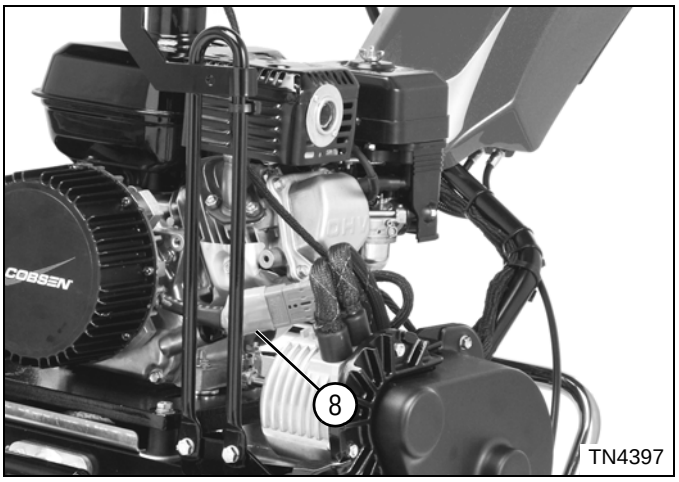

Figure 6-11: Gen-Set Models

10. Disconnect the battery pack/gen-set connector (8).

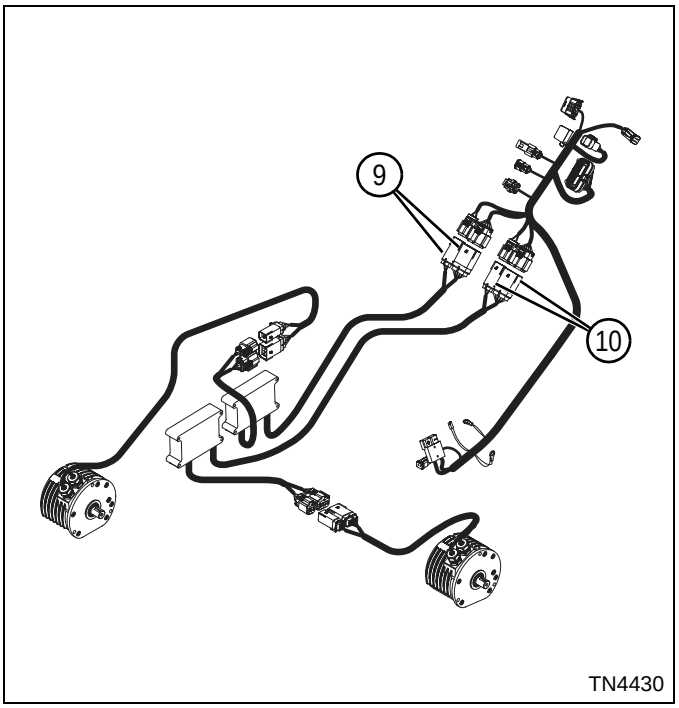

Figure 6-12

NOTE

Label all wires before disconnecting to ensure correct installation.

11. Disconnect reel motor controller harness connectors (9) and traction motor controller harness connectors (10).
12. For models 63336, 63337, 63345, and 63346, proceed to next step. For models 63340, 63341, 63349, and 63350, proceed to step 19.

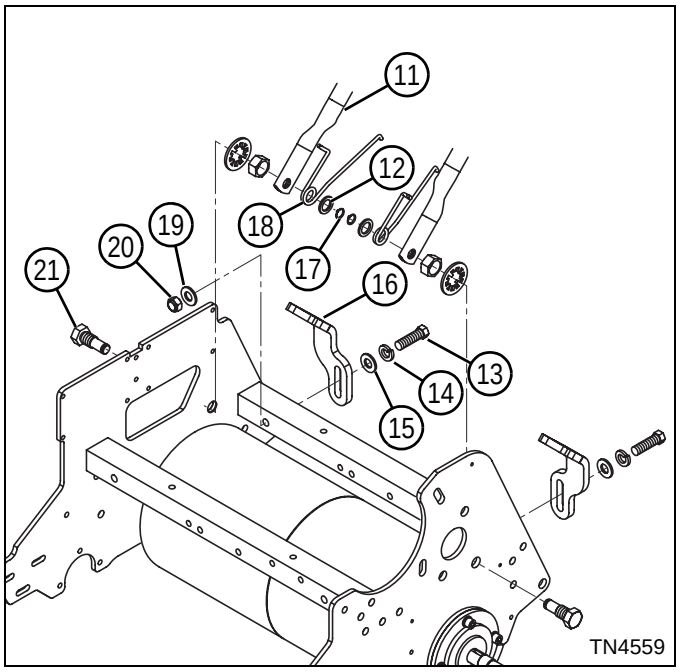

Figure 6-13

NOTE

Note orientation of torsion spring (18) before removal to ensure correct installation.

13. Disconnect torsion spring (18) from handle stop (16).

NOTE

Support handle assembly before removing mounting hardware.

14. Remove screw (13), lock washer (14), flat washer (15), flat washer (19), and nut (20).
15. Remove retaining ring (17), flat washer (12), and torsion spring (18) from handle mount bolt (21).
16. Remove handle assembly by pressing in on handle tube (11) until end of tube clears end of handle mount bolt (21).

NOTE

Note location and orientation of handle stop (16) before removal to ensure correct installation.

17. Remove handle stop (16) from handle tube (11).
18. Repeat steps 13 through 17 for left side of handle assembly.

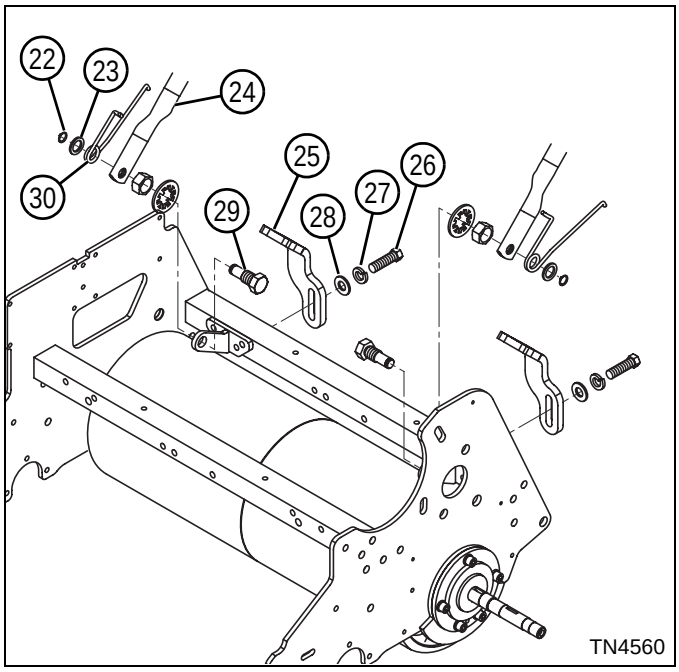

Figure 6-14

NOTE

Note orientation of torsion spring (30) before removal to ensure correct installation.

19. Disconnect torsion spring (30) from handle stop (25).

NOTE

Support handle assembly before removing mounting hardware.

20. Remove screw (26), lock washer (27),and flat washer (28).
21. Remove retaining ring (22), flat washer (23), and torsion spring (30) from handle mount bolt (29).
22. Remove handle assembly by pressing in on handle tube (24) until end of tube clears end of handle mount bolt (29).

NOTE

Note location and orientation of handle stop (25) before removal to ensure correct installation.

23. Remove handle stop (25) from handle tube (24).
24. Repeat steps 19 through 23 for left side of handle assembly.

Installation Notes

- *Install handle assembly by reversing the order of removal.*
- *Apply dielectric grease (Jacobsen PN 365422) to any connectors removed.*
- *Adjust handle height as needed. (See "Handle Height Adjustment" on page 6-3.)*
- *Check brake cable adjustment. Adjust as needed. (See "Park Brake Check and Adjustment" on page 7-4.)*

Handle and OPC Bail

Removal

See Figures 6-15 through 6-17.

1. Park the mower safely. (See “Park Mower Safely” on page 1-5.)
2. Remove handle cover. (See “Handle Cover” on page 6-4.)

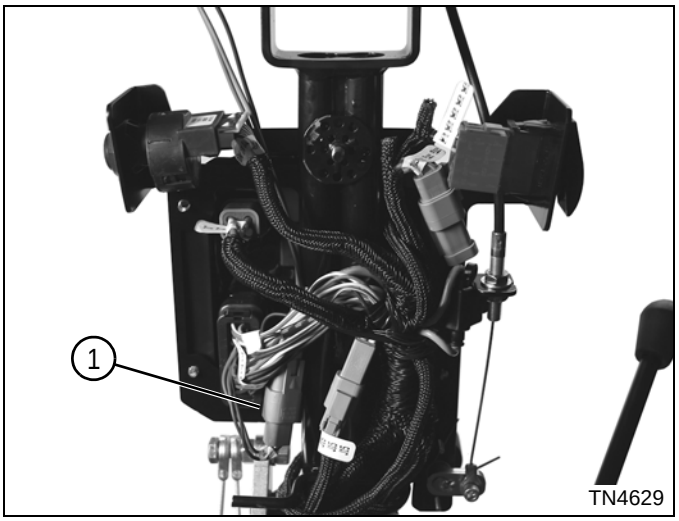

Figure 6-15

NOTE

Label all wires before disconnecting to ensure correct installation.

3. Disconnect throttle potentiometer harness connector (1).

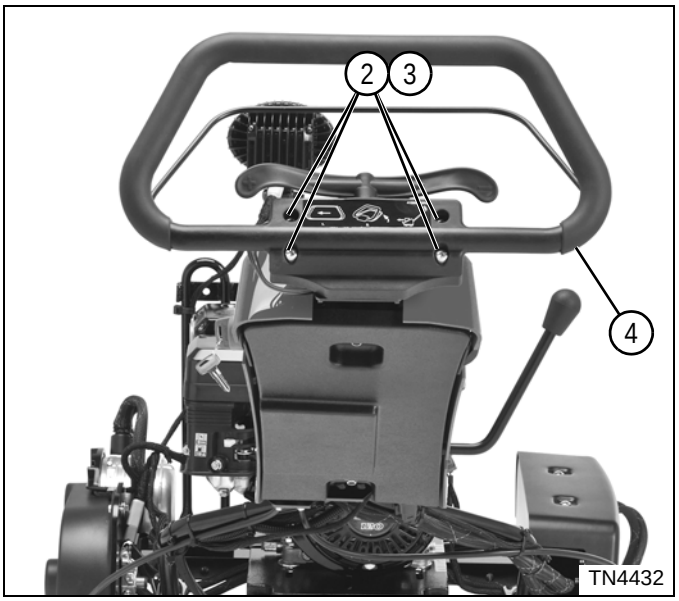

Figure 6-16

4. Remove four nuts (2) and screws (3).
5. Remove handle assembly (4).

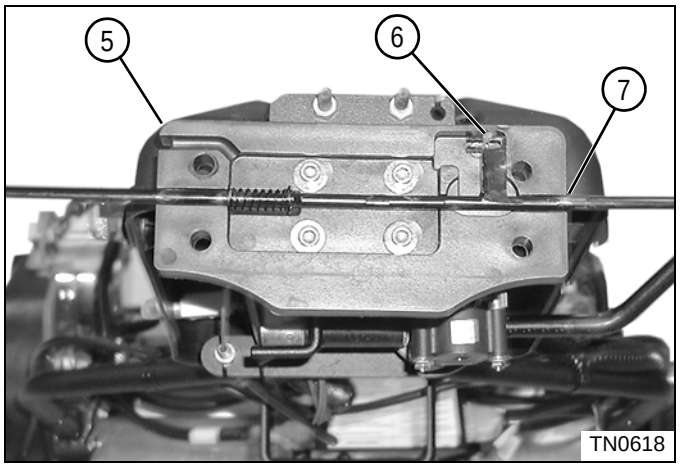

Figure 6-17

6. Disconnect cable end (6) from Operator Presence Control (OPC) bail (7).
7. Remove OPC bail (7) from tilt plate (5).

Installation

See Figures 6-18 through 6-20.

Required Materials
• Lubriplate® Grease • Dielectric Grease (Jacobsen PN 365422)

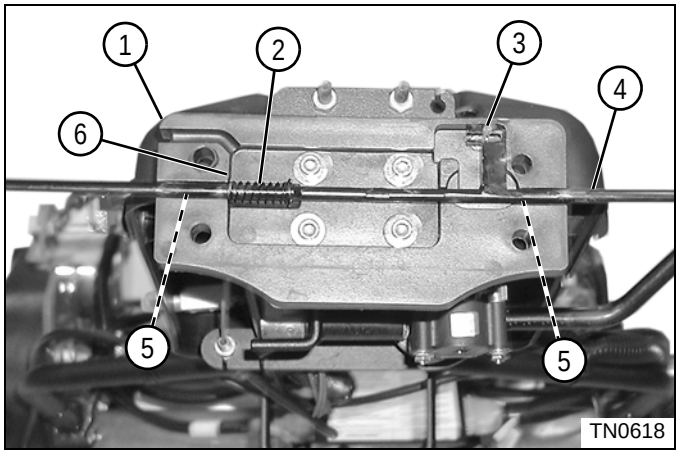

Figure 6-18

1. Apply a thin film of Lubriplate® grease to OPC bail grooves (5) of tilt plate (1) and spring (2) on OPC bail (4).
2. Install end of cable (3) into slot in OPC bail (4) and install OPC bail into tilt plate (1). Make sure end of spring (2) is flush against edge of opening (6) in tilt plate.

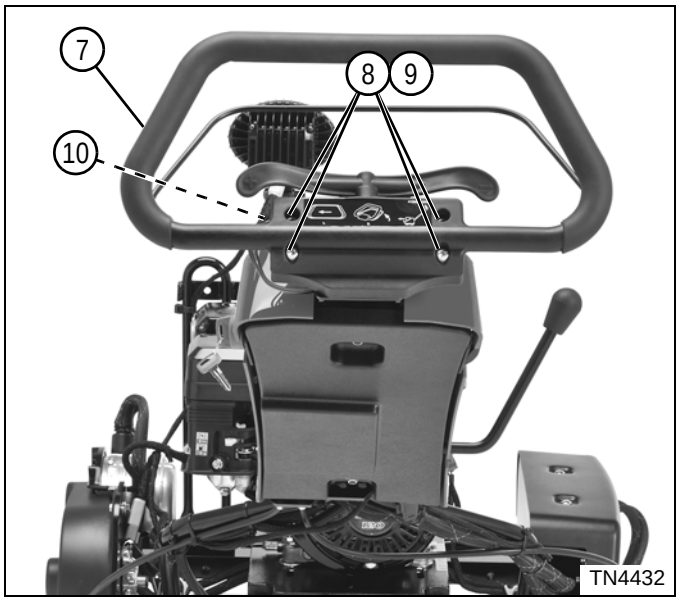

Figure 6-19

NOTE

Be sure potentiometer wires are routed through passage (10) to prevent pinching wires.

3. Install handle assembly (7) and secure with four screws (8) and nuts (9).

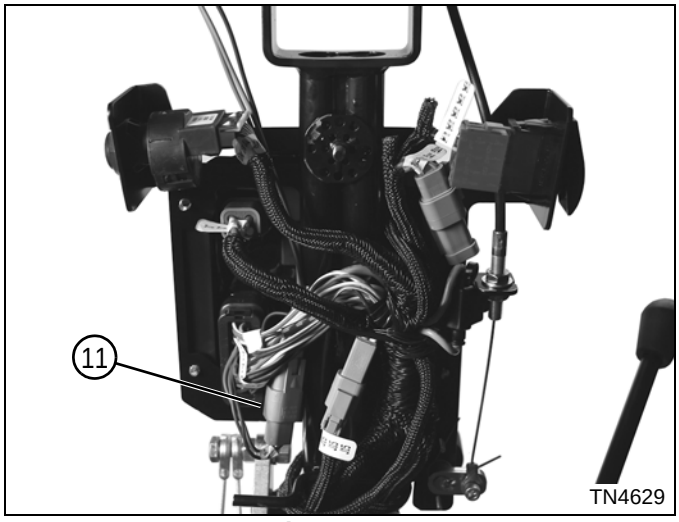

Figure 6-20

4. Apply dielectric grease (Jacobsen PN 365422) to any connectors removed.
5. Connect potentiometer harness connector (11).
6. Install handle cover. (See “Handle Cover” on page 6-4.)

OPC Cable

Removal and Installation

See Figures 6-21 and 6-22.

Required Materials
Dielectric Grease (Jacobsen PN 365422)

1. Park the mower safely. (See “Park Mower Safely” on page 1-5.)
2. Remove handle cover. (See “Handle Cover” on page 6-4.)
3. Remove handle and Operator Presence Control (OPC) bail. (See “Handle and OPC Bail” on page 6-8.)

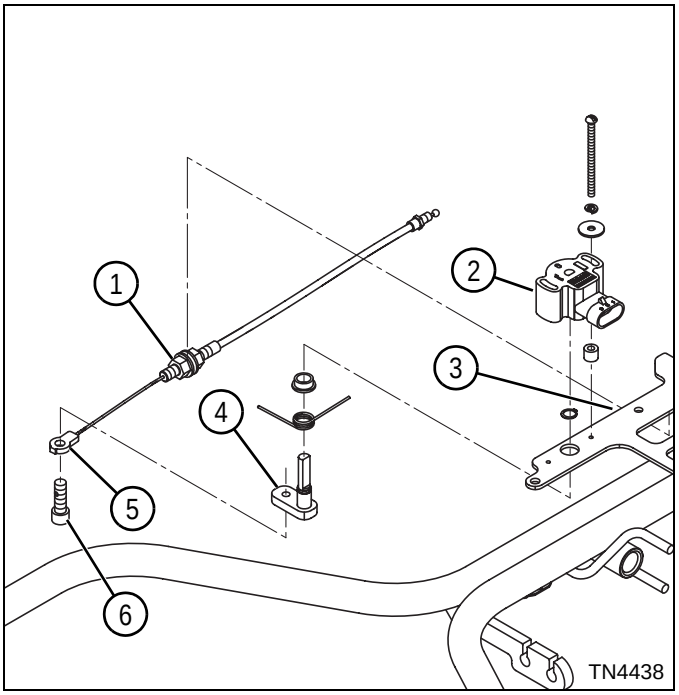

Figure 6-21

NOTE

Label all wires before disconnecting to ensure correct installation.

4. Disconnect wire harness connector from OPC bail control (2).
5. Remove screw (6) and OPC cable end (5) from pivot arm (4).
6. Loosen nut (1) and disengage OPC cable from bracket (3).

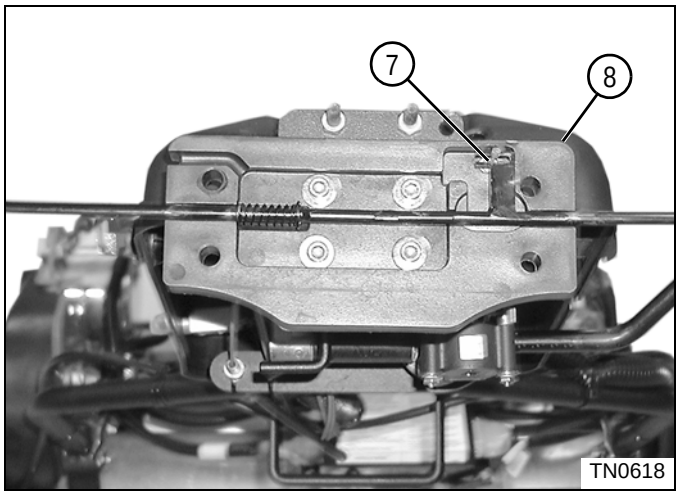

Figure 6-22

7. Remove OPC cable (7) from tilt plate (8).

Installation Notes

- *Install OPC cable by reversing the order of removal.*
- *Apply dielectric grease (Jacobsen PN 365422) to any connectors removed.*
- *Adjust OPC cable. (See “Operator Presence Control (OPC) Cable Adjustment” on page 6-2.)*

Speed Paddle

Removal and Installation

See Figure 6-23.

1. Park the mower safely. (See “Park Mower Safely” on page 1-5.)

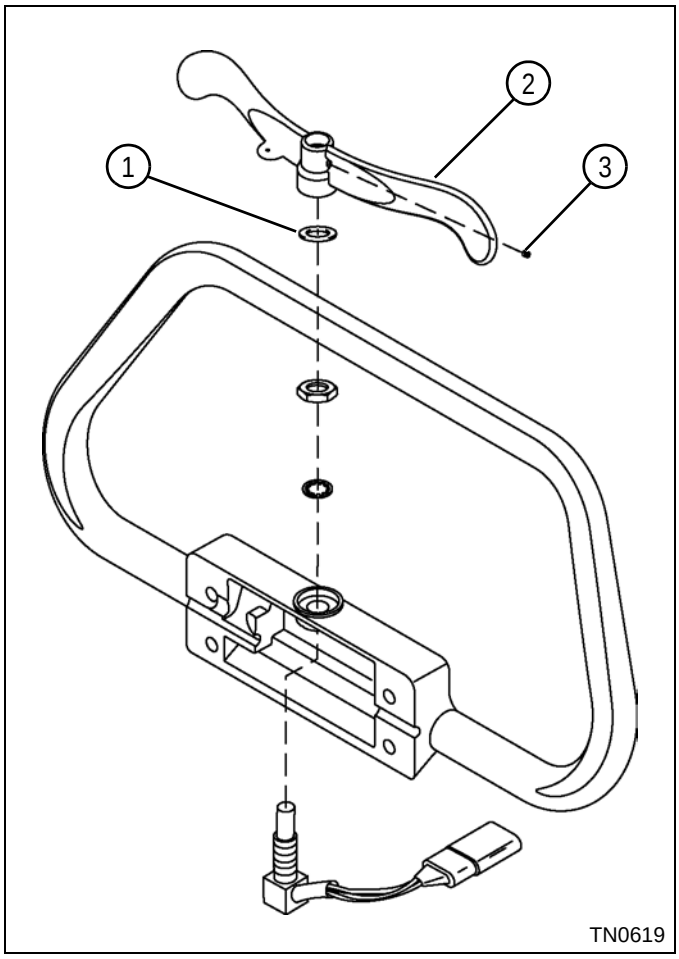

Figure 6-23

2. Loosen set screw (3), and remove speed paddle (2) and spring washer (1).

Installation Note

Install speed paddle by reversing the order of removal.

Brake Control Lever

Removal and Installation

See Figure 6-24.

1. Park the mower safely. (See “Park Mower Safely” on page 1-5.)
2. Release park brake.
3. Remove handle cover. (See “Handle Cover” on page 6-4.)

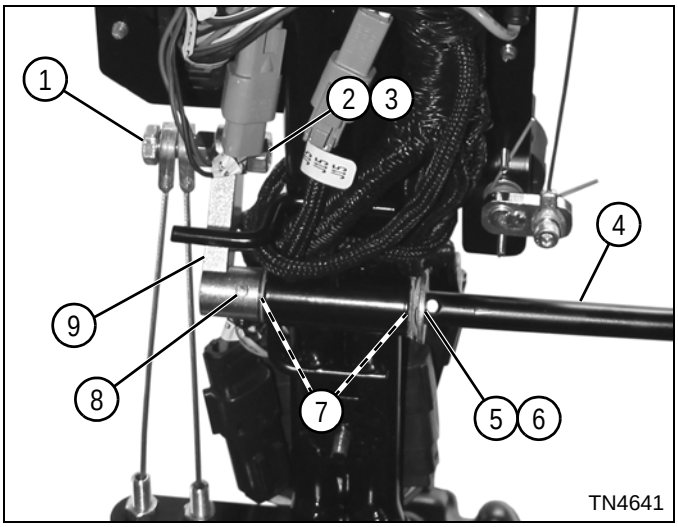

Figure 6-24

4. Remove nut (2), lock washer (3), and screw (1) from brake lever arm (9).
5. Using a punch, drive out pin (8) and remove lever arm (9).
6. Slide brake lever (4) out, and remove spring washer (5) and flat washer (6).
7. Inspect flanged bushings (7). Remove and replace as needed.

Installation Notes

- *Install brake control lever by reversing the order of removal.*
- *Check and adjust park brake as needed. (See “Park Brake Check and Adjustment” on page 7-4.)*

Chapter 7

Brakes

Specifications **7-2**
Repair Specifications 7-2
Troubleshooting **7-3**
Checks and Adjustments **7-4**
Park Brake Check and Adjustment 7-4
Repair **7-6**
Park Brake Cable 7-6
Park Brake Band 7-8

7

JACOBSEN
A Textron Company

Specifications

Repair Specifications

Specification		
Park Brake Lever Actuating Force	lb (kg)	10 (4.5)
Park Brake Band—Anchor Pin Center-to-Center Distance (Park Brake Released)	in. (mm)	1.50 (38)

Troubleshooting

Condition	Probable Cause	Remedy
Park brake does not engage when lever is engaged.	Park brake cables not adjusted properly.	Adjust park brake cables. (See “Park Brake Check and Adjustment” on page 7-4.)
	Park brake cables damaged.	Replace park brake cables. (See “Park Brake Cable” on page 7-6.)
	Park brake bands worn.	Replace park brake bands. (See “Park Brake Band” on page 7-8.)
Park brake does not hold mower.	Park brake cables not adjusted properly.	Adjust park brake cables. (See “Park Brake Check and Adjustment” on page 7-4.)
	Park brake bands worn.	Replace park brake bands. (See “Park Brake Band” on page 7-8.)
	Park brake bands contaminated.	Replace park brake bands. (See “Park Brake Band” on page 7-8.)
	Wheel hub damaged/roll pin(s) missing.	Repair/replace wheel hub. (See “Wheel Hubs and Bearings” on page 9-3.)
	Traction drum differential gears damaged.	Repair/replace differential assembly. (See “Differential Assembly” on page 5-17.)
Excessive brake wear.	Park brake cables not adjusted properly/not releasing fully.	Adjust park brake cables. (See “Park Brake Check and Adjustment” on page 7-4.)

Checks and Adjustments

Park Brake Check and Adjustment

NOTE

Right-side brake assembly shown; left-side assembly is similar.

See Figures 7-1 through 7-4.

Check Procedure

1. Park the mower safely. (See “Park Mower Safely” on page 1-5.)
2. Remove transport wheels (if equipped). (See “Transport Wheels (Optional)” on page 9-2.)
3. Disengage park brake.

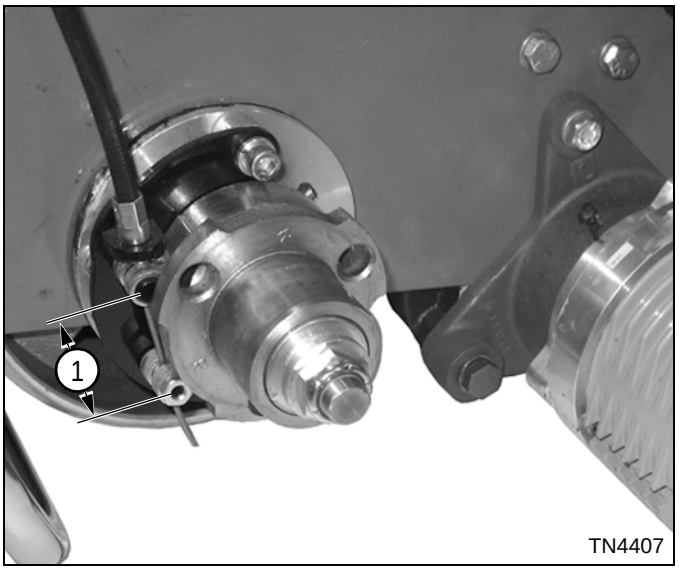

Figure 7-1

4. Measure distance (1) between center of park brake band anchor bolts. When correctly adjusted, distance should be 1.50 in. (38 mm).

   Repeat on other side of mower.

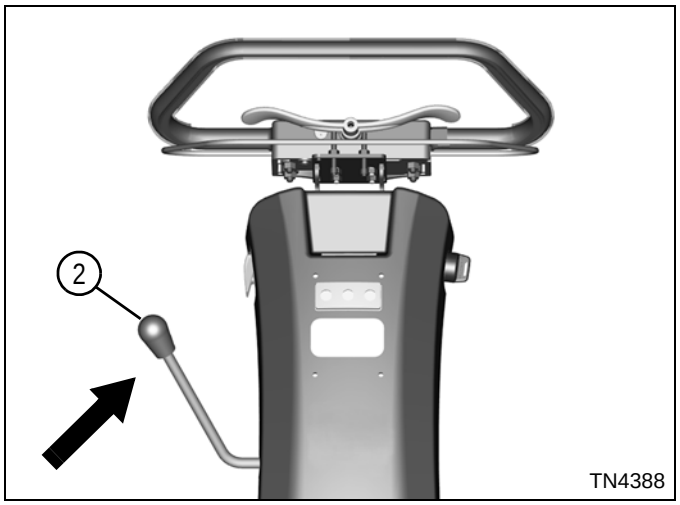

Figure 7-2

5. Attach a scale to top of brake lever (2). Record force required to engage park brake. A properly adjusted brake requires 10 lb (4.5 kg) pull to engage brake.
6. If brakes do not meet specifications, proceed to “Adjustment Procedure.”

Adjustment Procedure

NOTE

Minor park brake adjustments are made at the handle.

1. Remove handle cover. (See “Handle Cover” on page 6-4.)

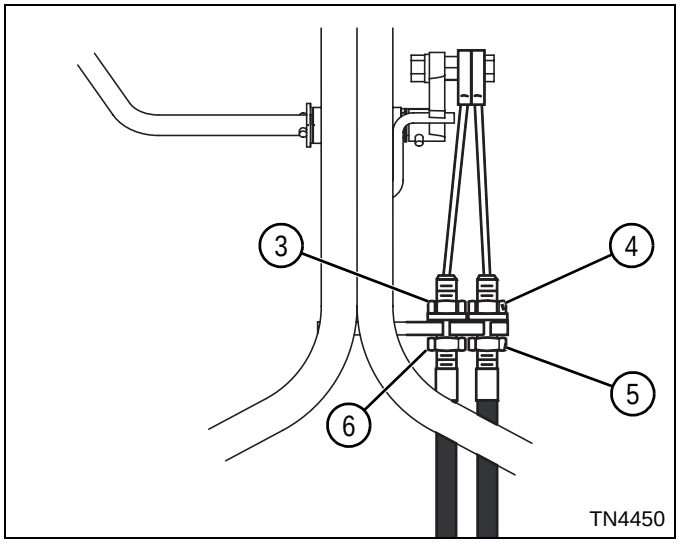

Figure 7-3

2. Loosen jam nuts (3 and 4). Turn nuts (5 and 6) to adjust brake cable, then tighten nuts (3 and 4).

   If adjustments cannot be made at the cable, make the adjustment at the brake bands.

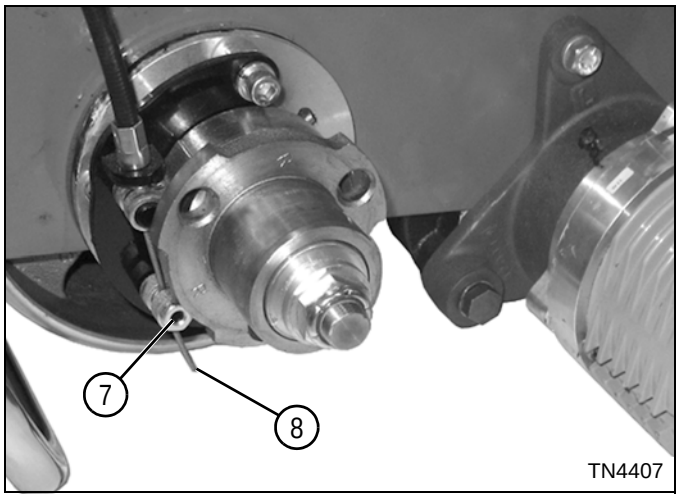

Figure 7-4

3. Loosen screw (7) and pull cable (8) to obtain desired brake tension. Tighten screw (7).
4. Repeat “Check Procedure.”
5. Install handle cover. (See “Handle Cover” on page 6-4.)
6. Install transport wheels (if equipped). (See “Transport Wheels (Optional)” on page 9-2.)

Repair

Park Brake Cable

Removal

See Figures 7-5 through 7-7.

1. Park the mower safely. (See “Park Mower Safely” on page 1-5.)
2. Remove transport wheels (if equipped). (See “Transport Wheels (Optional)” on page 9-2.)
3. Release park brake.
4. Remove handle cover. (See “Handle Cover” on page 6-4.)

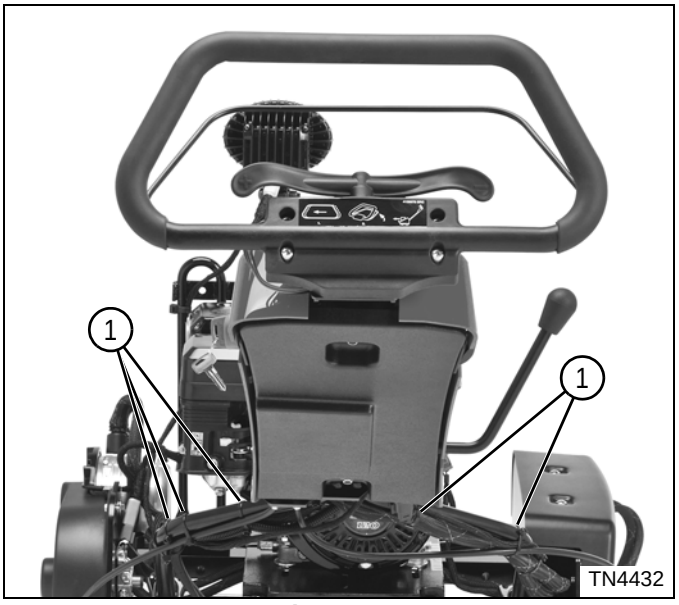

Figure 7-5

NOTE

Record position of cable ties before removing to ensure correct installation.

5. Remove cable ties (1).

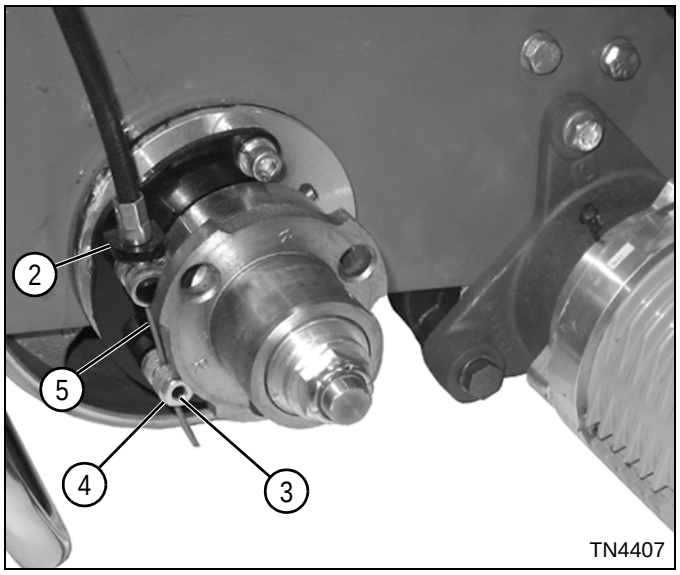

Figure 7-6

6. Loosen set screw (3) and remove brake cable (5) from lower brake band pin (4) and bracket (2).
7. Remove lower brake band pin (4).

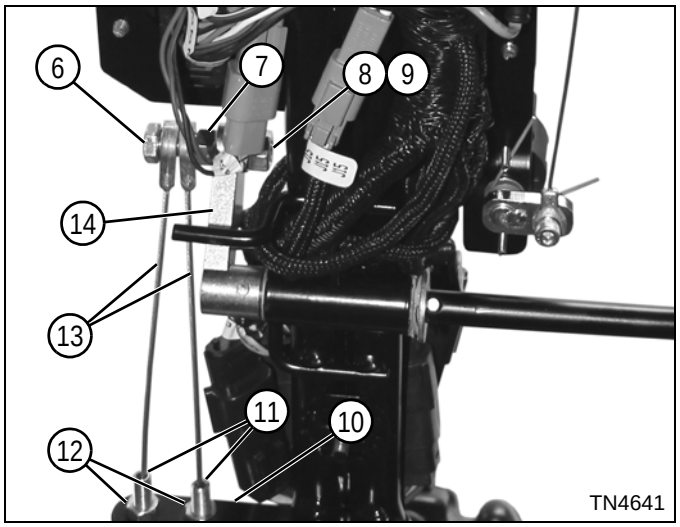

Figure 7-7

8. Remove nut (8), lock washer (9), and screw (6) from brake lever arm (14).
9. Remove nut (7) from screw (6) and remove brake cables (13).
10. Remove jam nuts (12) from brake cable sheaths (11), and slide brake cable sheaths down and remove from bracket (10).

Installation

See Figures 7-8 and 7-9.

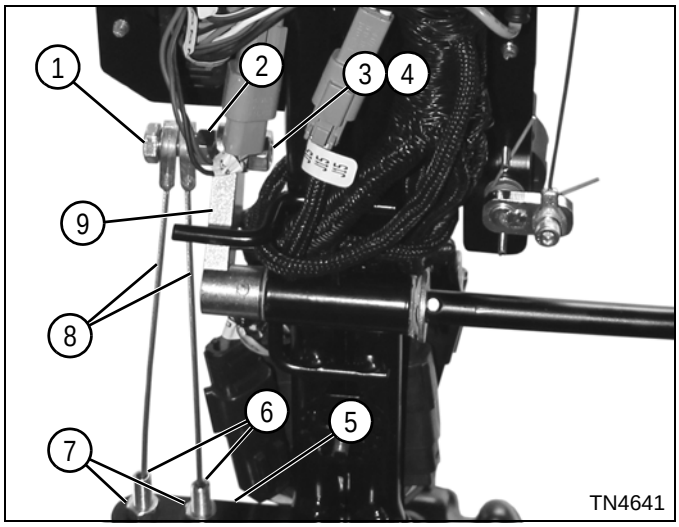

Figure 7-8

1. Slide brake cable sheaths (6) into bracket (5) and secure with jam nuts (7).
2. Install screw (1) through cables (8) and install nut (2).
3. Install screw (1) on brake lever arm (9) and secure using lock washer (3) and nut (4).

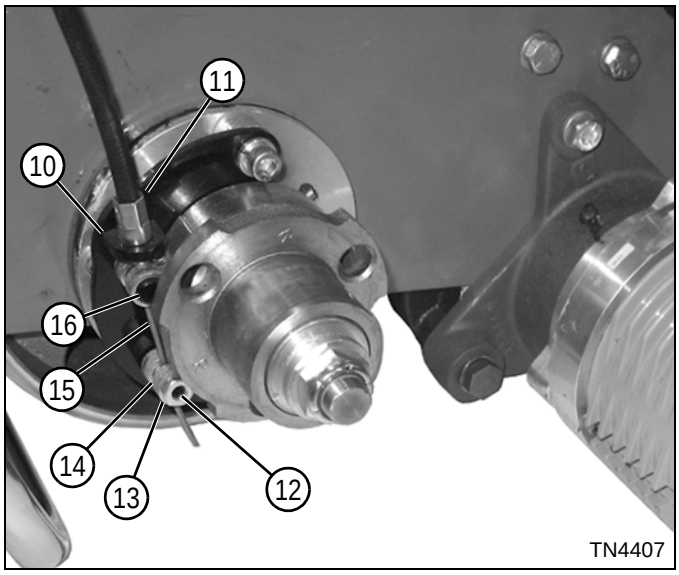

Figure 7-9

4. Install lower brake band pin (13) into brake band (14).
5. Route end of brake cable (15) through bracket (10), upper brake band pin (16), and lower brake band pin (13).
6. Position brake band so upper brake band pin (16) rests against end of cable sheath (11).
7. Move free end of brake band until distance between center of park brake band pins (13 and 16) is approximately 1.50 in. (38 mm). Tighten set screw (12).
8. Check brake adjustment. (See “Park Brake Check and Adjustment” on page 7-4.)

Park Brake Band

Removal

See Figure 7-10.

1. Park the mower safely. (See “Park Mower Safely” on page 1-5.)
2. Remove transport wheels (if equipped). (See “Transport Wheels (Optional)” on page 9-2.)
3. Release park brake.

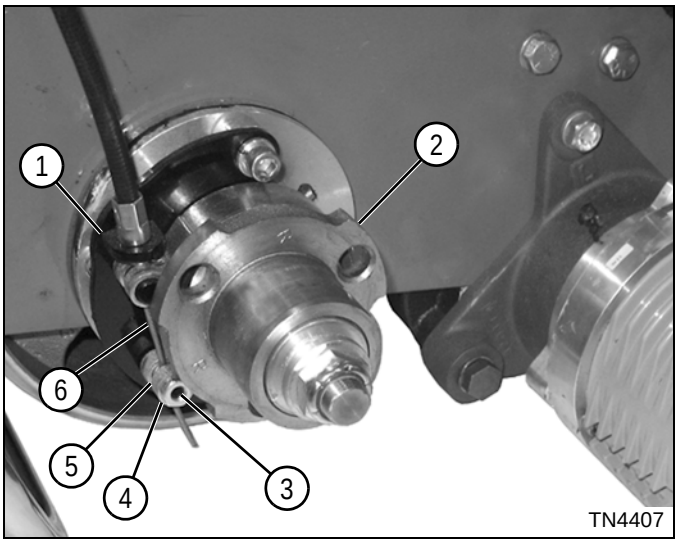

Figure 7-10

4. Loosen set screw (3) and remove brake cable (6) from lower brake band pin (4) and bracket (1).
5. Remove lower brake band pin (4).
6. Remove wheel hub (2). (See “Wheel Hubs and Bearings” on page 9-3.)
7. Remove brake band (5) from bracket.

Installation

See Figures 7-11 and 7-12.

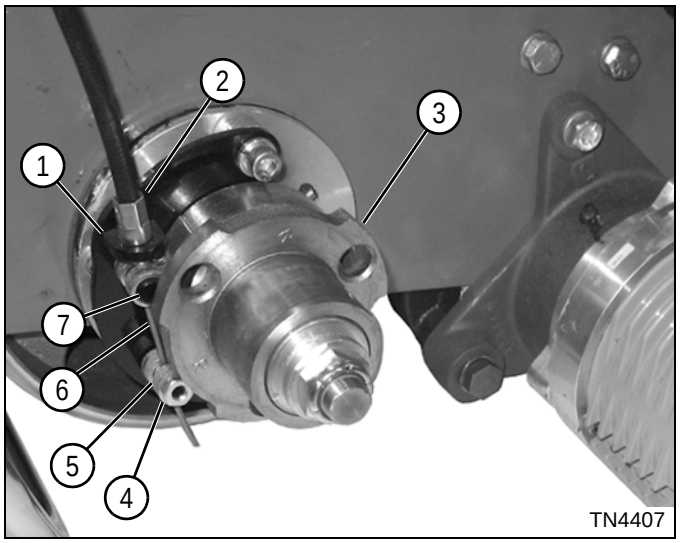

Figure 7-11

1. Install park brake band (5) on bracket (1).
2. Install wheel hub (3). (See “Wheel Hubs and Bearings” on page 9-3.)
3. Install lower brake band pin (4) into brake band (5).
4. Route end of brake cable (6) through bracket (1), upper brake band pin (7), and lower brake band pin (4).
5. Position brake band so upper brake band pin (7) rests against end of cable sheath (2).

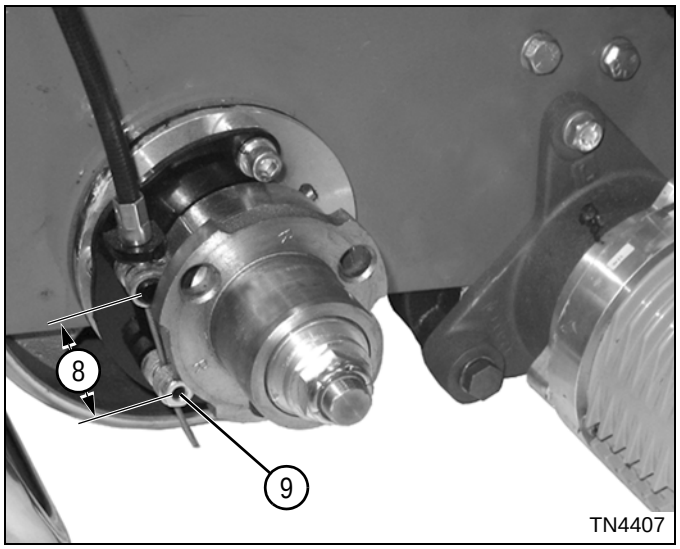

Figure 7-12

6. Move free end of brake band until distance between center of park brake band pins (8) is approximately 1.50 in. (38 mm). Tighten set screw (9).
7. Check brake adjustment. (See “Park Brake Check and Adjustment” on page 7-4.)

Chapter 8

Cutting Unit

Specifications **8-2**
General Specifications 8-2
Check and Adjustment Specifications 8-2
Component Location **8-3**
Troubleshooting **8-3**
Quality-of-Cut Troubleshooting 8-3
Mechanical Troubleshooting 8-12
Checks and Adjustments **8-13**
Reel and Bedknife Inspection 8-13
Bedknife-to-Reel Adjustment 8-14
Battery Tray Adjustment 8-15
Engine Fore/Aft Adjustment 8-15
Backlapping Procedure 8-15
Height-of-Cut Adjustment (HOC) 8-17
Reel Bearing Pre-Load Adjustment 8-18
Grass Shield Adjustment 8-19
Repair **8-20**
Cutting Unit 8-20
Grass Shield 8-21
Bedknife Backing Assembly 8-22
Bedknife 8-24
Right Reel Bearing Housing Assembly 8-25
Left Reel Bearing Housing Assembly 8-28
Reel Assembly 8-31
Floating Head 8-32
Cutting Unit Front Roller 8-33
Cutting Unit Rear Roller 8-33
Floating Head Roller 8-34
Cutting Unit Rear Roller and Floating Head Roller—Roller Bearings 8-34

8

JACOBSEN
A Textron Company

Specifications

General Specifications

Specification		
Height-of-Cut Range (Bench Setting)	in. (mm)	1/16–7/16 (1.6–11.1)
High-Profile Cut Yield	in. (mm)	5/32–7/16 (3.96)
Low-Profile Cut Yield	in. (mm)	1/8–7/32 (3.17)
Tournament Cut Yield	in. (mm)	3/32–5/32 (2.38)
Super Tournament Cut Yield	in. (mm)	5/64–7/64 (1.58)
Championship Cut Yield	in. (mm)	1/16 –7/64 (1.58)
Reel Diameter	in. (mm)	5 (127)
Reel Composition		Hardened High-Manganese Carbon Steel
Width of Cut	in. (cm)	18 (457), 22 (557.5)

Check and Adjustment Specifications

Specification		
Bedknife-to-Reel Gap	in. (mm)	0.001–0.003 (0.025–0.075)
Reel Bearing Pre-Load	in. (mm)	0.040 (1.0)
Bedknife Front Face Height (minimum)	in. (mm)	0.035 (0.9)
Bedknife Front Face Angle (all bedknives)	degrees	5
Bedknife Top Face Angle (rear relief) (all bedknives except Super Tournament)	degrees	8–10
Super Tournament Bedknife Top Face Angle (rear relief)	degrees	5–7
Reel Blade Relief Angle	degrees	45

Component Location

See Figure 8-1.

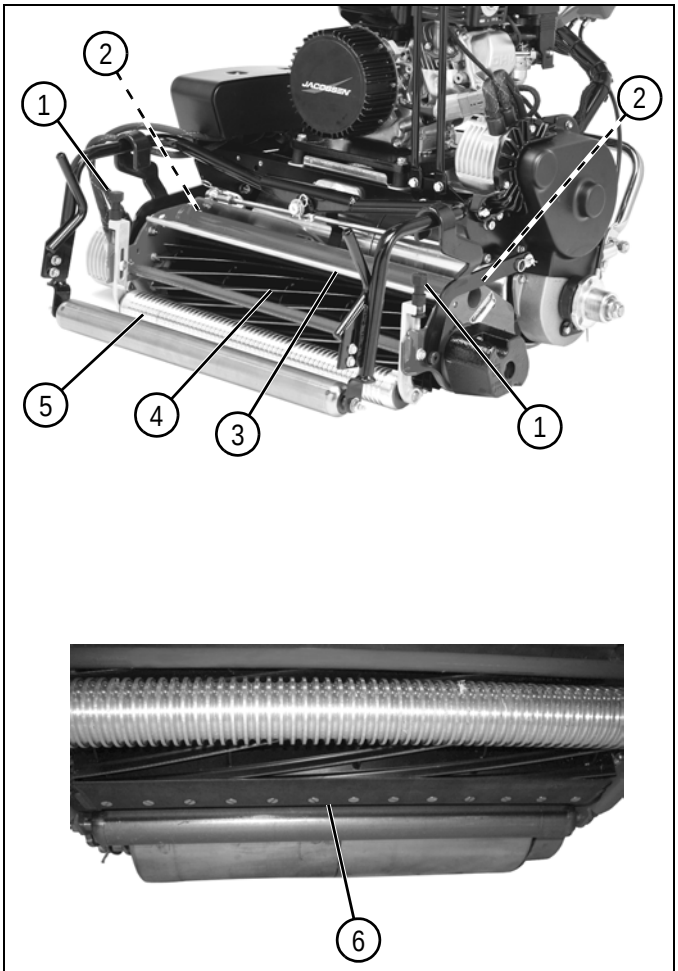

1	Roller Height Adjuster (2)	4	Reel
2	Bedknife Adjuster (2)	5	Cutting Unit Front Roller
3	Grass Shield	6	Bedknife/Backing Assembly

Figure 8-1

Troubleshooting

Quality-of-Cut Troubleshooting

Factors That Affect Cut Appearance

Even though the cutting units are properly sharpened and adjusted, some mowing practices and turf conditions can cause poor cutting results. These include:

- Repetitious mowing patterns—tires running over the same path—may cause depressions and ruts. This is also known as compaction.
- Mowing with excessive moisture in the ground may result in varying cutting heights. The mower slides over the wet turf, leaving grass uncut and depressed.
- Repetitious cutting of grass in the same direction may cause the grass to take a permanent set in that direction. The reel and bedknife have difficulty “lifting” the grass into cutting position. This condition is called graining.
- Poor quality grass that is matted cannot be lifted and cut uniformly.
- Dry grass does not lubricate the blades and leads to early dulling of the blades.

In most cases, information provided by the user/customer will provide the basis for the repairs and adjustments that may be required. However, it is recommended that a “test cut” be performed to evaluate the mower’s performance before beginning repairs or adjustments.

An area should be available where “test cuts” can be made. This area should provide known and consistent turf conditions to allow accurate evaluation of the mower’s performance.

Before performing a “test cut” to diagnose cut appearance and mower performance, verify the following items to ensure an accurate “test cut:”

1. Mowing (Ground) Speed
2. Reel Bearing Condition and Pre-Load (End Play) Adjustment
3. Reel and Bedknife Sharpness
4. Bedknife Alignment to Reel
5. Bedknife-to-Reel Contact
6. Height-of-Cut (HOC)
7. Bedknife Application (Correct Bedknife)
8. Roller and Roller Bearing Condition
9. Reel Speed
10. Frequency-of-Clip (FOC)
11. Another “test cut” should be performed after the completion of the repairs and/or adjustments to verify the mower’s performance.

Definition of Terms

The following terms are used to describe various cut appearance symptoms.

Washboarding

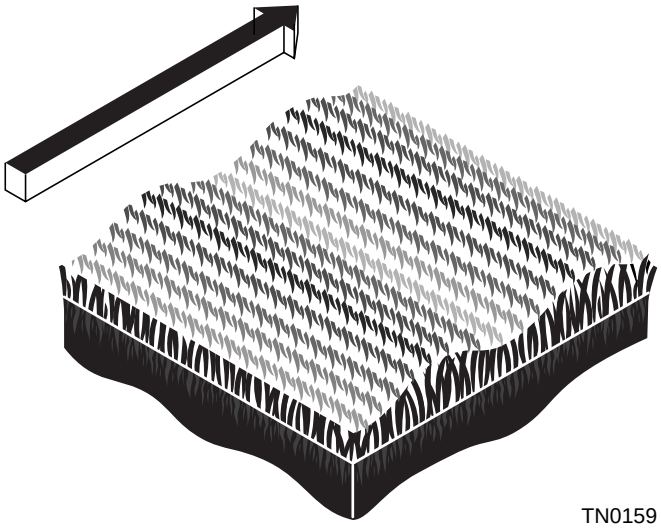

TN0159

NOTE: One cutting unit width shown. Arrow indicates direction of travel.

Washboarding is a cyclical pattern of varying cutting heights, resulting in a wave-like cut appearance. In most cases, the wave tip-to-tip distance is approximately 6–8 in. (15–20 cm). Color variation (light-to-dark) may also be noticed.

This condition is usually caused by a rocking motion in the cutting unit(s). This condition is found mostly on mowers with multiple (suspended) cutting units, but other causes in walk-behind mowers can produce the same result.

Washboarding may also be caused by variations in the turf.

Probable Cause	Remedy
Mowing (ground) speed is too fast.	Reduce mowing (ground) speed.
Grass buildup on roller.	Clean the rollers and use scrapers or brushes.
Roller is out of round.	Replace front roller. (See “Cutting Unit Front Roller” on page 10-8.)
Mowing in the same direction.	Change mowing direction regularly.
Use of a groomer on cleanup pass.	Groomers should be used only in a straight line.
Reel drive motor performance is reduced.	Check operation of reel motor(s) and repair/replace as necessary.
Battery tray adjusted too far back.	Adjust battery tray. (See “Battery Tray Adjustment” on page 8-15.)
Engine/gen-set adjusted too far back.	Adjust engine forward on mount plate. (See “Engine Fore/Aft Adjustment” on page 8-15.)

Marcelling

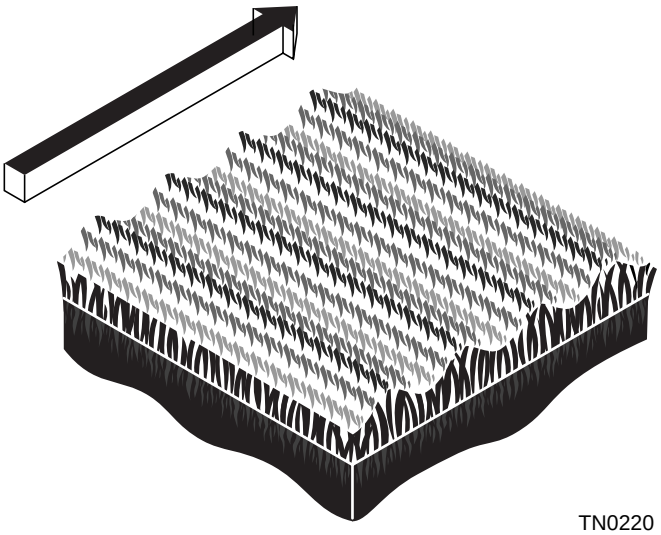

TN0220

NOTE: One cutting unit width shown. Arrow indicates direction of travel.

Marcelling is a wave-like cut appearance similar to washboarding but with a uniform cutting height and smaller wave tip-to-tip distance. In most cases, the wave tip-to-tip distance is 2 in. (5 cm) or less. Color variation (light-to-dark) may also be noticed. This condition is usually caused by an incorrect frequency-of-clip.

Probable Cause	Remedy
Incorrect frequency-of-clip.	Check and adjust frequency-of-clip. Frequency-of-clip must be equal to or less than height-of-cut. Verify proper reel is being used for the correct application and change if necessary. May need more blades.
Mowing (ground) speed is too fast.	Reduce mowing (ground) speed.
HOC (height-of-cut) setting is too low for the machine's capability.	Confirm proper HOC range for reel/bedknife combination.
Reel speed too slow.	Check/set reel speed rpm. (See "Fixed Reel Speed" on page 4-42.)

Step Cutting

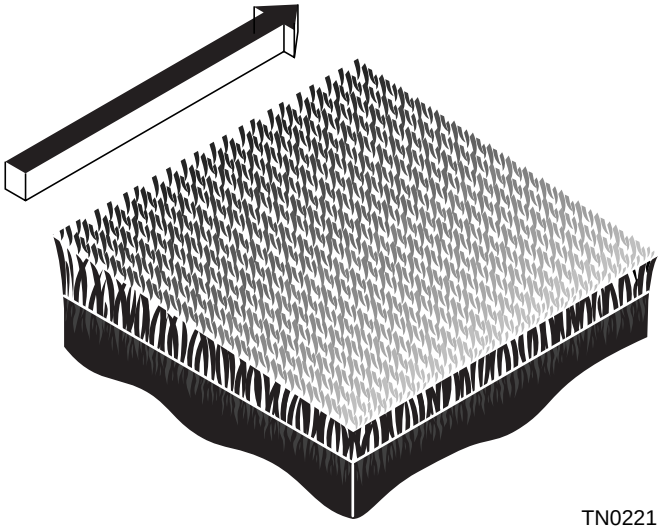

NOTE: One cutting unit width shown. Arrow indicates direction of travel.

Step cutting occurs when grass is cut taller on one side of the reel than the other. This is usually caused by mechanical wear or an incorrect roller adjustment.

Probable Cause	Remedy
HOC (height-of-cut) settings are different from one side of the reel to the other.	Check HOC adjustment. (See “Height-of-Cut Adjustment (HOC)” on page 8-17.)
Worn roller bearings.	Check/replace roller bearings. (See “Cutting Unit Front Roller” on page 10-8.)
Worn reel bearings.	Check/replace/adjust reel bearings. (See “Reel Bearing Pre-Load Adjustment” on page 8-18.)
Reel-to-bedknife contact is different from one side of the cutting unit to the other.	Check reel to bedknife contact. (See “Bedknife-to-Reel Adjustment” on page 8-14.)
Cutting unit movement is restricted.	Check/remove cutting unit movement restriction.
Variations in turf density.	Change mowing direction.

Scalping

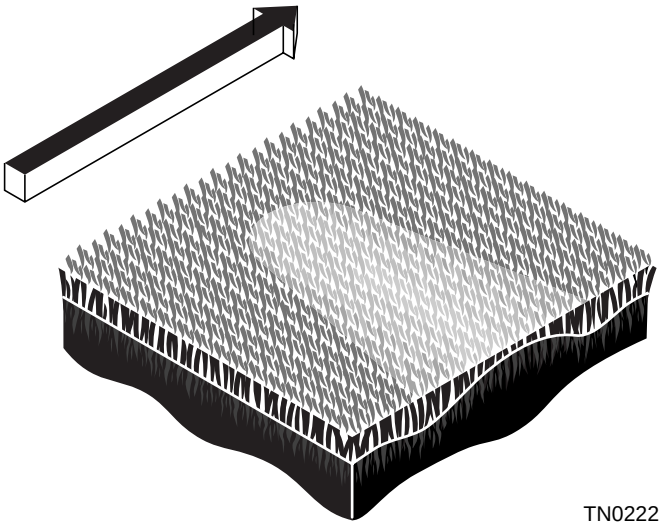

TN0222

NOTE: One cutting unit width shown. Arrow indicates direction of travel.

Scalping is a condition in which areas of grass are cut noticeably shorter than the surrounding areas, resulting in a light green or even brown patch. This is usually caused by an excessively low height-of-cut setting and/or uneven turf.

Probable Cause	Remedy
HOC (height-of-cut) settings are lower than normal.	Check and adjust the HOC settings. (See “Height-of-Cut Adjustment (HOC)” on page 8-17.)
Turf too uneven for the mower to follow.	Try a different mowing direction.
Incorrect bedknife for HOC.	Install correct bedlknife for desired HOC. (See “Bedknife Backing Assembly” on page 8-22.)
Cutting too much grass at one time.	Mow more often.
Mowing (ground) speed is too fast.	Reduce mowing (ground) speed.

Stragglers

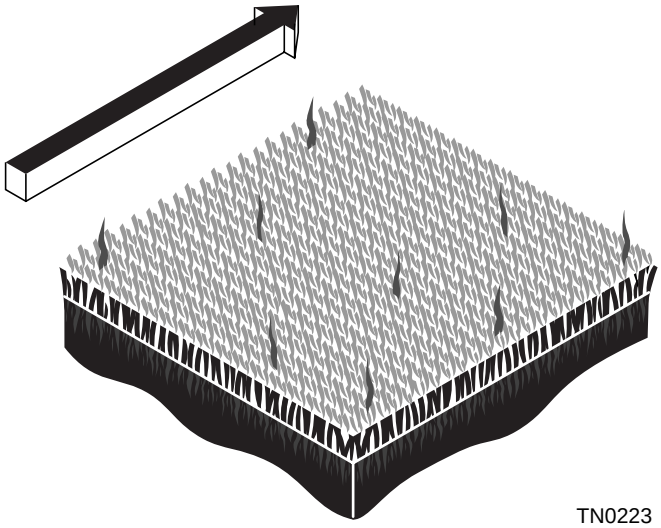

TN0223

NOTE: One cutting unit width shown. Arrow indicates direction of travel.

Stragglers are scattered blades of uncut or poorly cut grass.

Probable Cause	Remedy
Bedknife improperly adjusted.	Adjust bedknife. (See “Bedknife-to-Reel Adjustment” on page 8-14.)
Dull cutting edges.	Sharpen reel and bedknife.
Mowing (ground) speed is too fast.	Reduce mowing (ground) speed.
Incorrect roller.	Install correct roller for application. (See “Cutting Unit Front Roller” on page 10-8.)
Grass is too tall.	Mow more often.
Mowing in the same direction.	Change mowing direction regularly.

Streaks

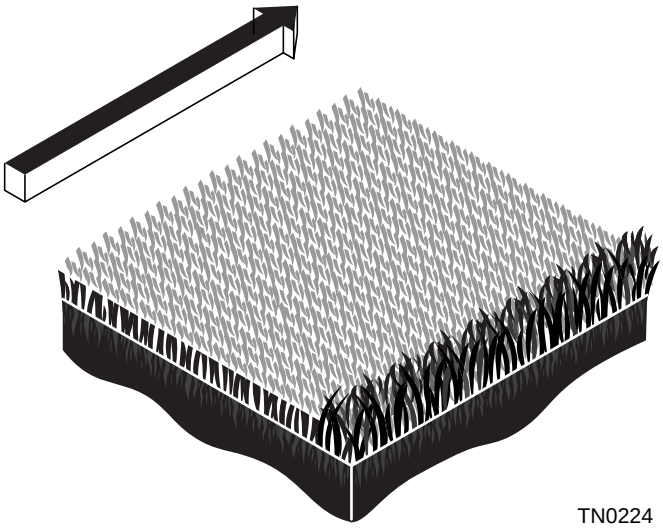

NOTE: One cutting unit width shown. Arrow indicates direction of travel.

A streak is a line of uncut grass. This is usually caused by a nicked or bent bedknife.

Probable Cause	Remedy
Damaged bedknife.	Replace bedknife. (See “Bedknife Backing Assembly” on page 8-22.)
Damaged or unevenly worn reel.	Inspect reel. Replace as needed. (See “Reel Assembly” on page 8-31.)
Loose or missing bedknife fasteners.	Check bedknife screws: Tighten loose screws; replace missing screws. (See “Bedknife Backing Assembly” on page 8-22.)
Incorrect roller.	Install correct roller for application. (See “Cutting Unit Front Roller” on page 10-8.)
Bedknife is matting the grass down.	Install correct bedknife for application. (See “Bedknife Backing Assembly” on page 8-22.)
Wet grass is matted down before it is cut.	Cut when grass is dry.

Windrowing

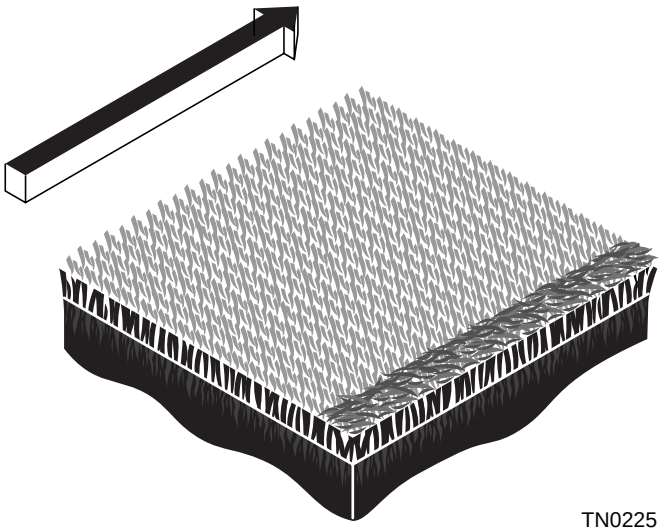

NOTE: One cutting unit width shown. Arrow indicates direction of travel.

Windrowing is the deposit of clippings concentrated at one end of the cutting unit, forming a line in the direction of travel.

Probable Cause	Remedy
Grass is too tall.	Mow more often.
Mowing while turf is wet.	Mow when turf is dry.
Grass buildup on roller.	Clean the rollers and use scrapers or brushes.
Grass collecting on mower or cutting unit frame.	Clear cutting unit grass shield.
Improperly adjusted scraper.	Adjust scraper. (See “Scraper Blade Assembly” on page 10-16.)
Improperly adjusted grass shield.	Adjust grass shield. (See “Grass Shield Adjustment” on page 8-19.)

Rifling or Tramlining

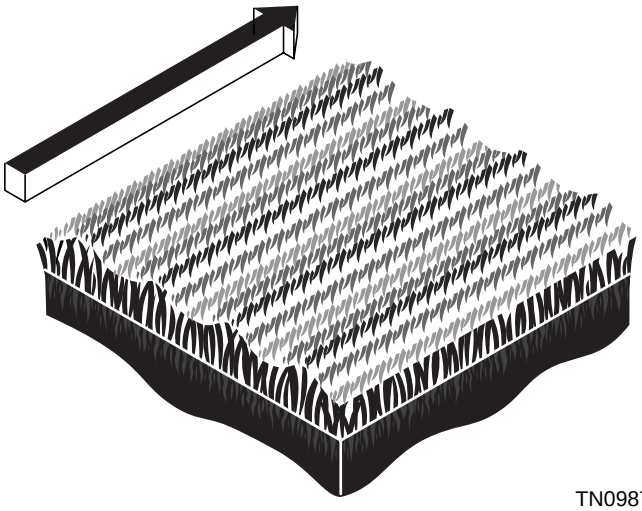

TN0987

NOTE: One cutting unit width shown. Arrow indicates direction of travel.

Rifling or tramlining is a pattern of varying cutting heights, resulting in a wave-like cut appearance, usually due to heavy contact points across the reel and/or bedknife.

Probable Cause	Remedy
Reel and/or bedknife unevenly worn.	Inspect bedknife and reel. Grind or replace as needed. (See “Reel and Bedknife Inspection” on page 8-13.)

Mechanical Troubleshooting

Cutting Unit

Condition	Probable Cause	Remedy
Reel drive does not engage when Operator Presence Control (OPC) bail is engaged.	System voltage too low.	Check system charge. (See “Battery Pack Test” on page 4-45.)
	Mow switch not engaged.	Engage mow switch.
	Reel motor harness connector not connected.	Connect reel motor harness connector. (See “Reel Motor” on page 4-62.)
	Reel motor harness not connected at controller.	Connect reel motor harness at controller. (See “Reel Control Unit” on page 4-67.)
	OPC cable misadjusted.	Adjust OPC cable. (See “OPC Cable” on page 6-10.)
	Bail lever not properly calibrated.	Calibrate bail lever. (See “Bail Lever Calibration” on page 4-43.)
	Mow switch faulty.	Test mow switch. (See “Mow Switch Test” on page 4-49.)
	Bail potentiometer faulty.	Test bail potentiometer. (See “Bail Potentiometer Test” on page 4-55.)
	Reel motor controller faulty.	Substitute with a known good reel motor controller.
	Reel motor faulty.	Test/replace reel motor. (See “Reel Motor Test” on page 4-53.)
Reel drive does not reach full speed.	Reel motor faulty.	Test/replace reel motor. (See “Reel Motor Test” on page 4-53.)
	Bedknife-to-reel contact too tight.	Check bedknife-to-reel adjustment. (See “Bedknife-to-Reel Adjustment” on page 8-14.)
	Speed paddle not properly calibrated.	Calibrate speed paddle. (See “” on page 4-43.)
	Bail lever not properly calibrated.	Calibrate bail lever. (See “Bail Lever Calibration” on page 4-43.)

Checks and Adjustments

Reel and Bedknife Inspection

See Figure 8-2.

1. Park the mower safely. (See “Park Mower Safely” on page 1-5.)

CAUTION

To prevent personal injury and damage to the cutting edges, handle the reel with extreme care.

NOTICE

Gen-Set Models: Before tipping mower back for service, the fuel lever must be moved to the OFF position to prevent fuel from leaking into the crankcase. Do not leave the mower tipped back for an extended length of time or oil may migrate into the combustion chamber.

2. Check the reel bearings for end play or radial play. If there is any abnormal movement of the reel, up and down or side to side, adjust or replace components as needed. (See “Reel Bearing Pre-Load Adjustment” on page 8-18.)

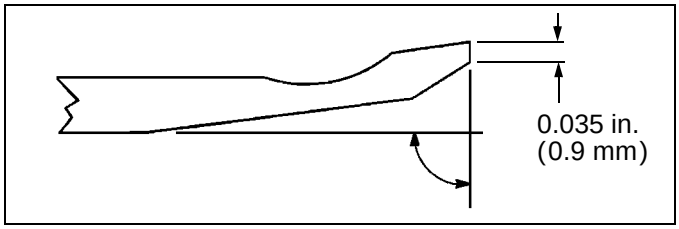

Figure 8-2

3. Inspect the reel blades and bedknife to ensure good sharp edges without bends or nicks.
   a. The cutting edges of the reel blades and bedknife must be sharp, free of burrs, and show no signs of rounding off.
   b. The bedknife and bedknife backing must be securely tightened. The bedknife must be straight and sharp.
   c. A flat surface of 0.035 in. (0.9 mm) minimum must be maintained on the front face of the bedknife. Use a standard flat file to dress the bedknife.
4. If wear or damage is beyond the point where the reel or bedknife can be corrected by the lapping process, it must be reground.
5. Proper reel-to-bedknife adjustment is critical. A gap of 0.001–0.003 in. (0.025–0.075 mm) must be maintained across the entire length of the reel and bedknife.
6. The reel must be parallel to the bedknife. An improperly adjusted reel will lose its sharp edges prematurely and may result in serious damage to the reel and bedknife.
7. Grass conditions will also affect the adjustment.
   a. Dry, sparse conditions will require a wider gap to prevent heat buildup and damage to the reel and bedknife.
   b. High-quality grass with a good moisture content requires a closer gap (near zero).

Bedknife-to-Reel Adjustment

See Figures 8-3 through 8-5.

1. Inspect reel and bedknife before performing adjustment. (See “Reel and Bedknife Inspection” on page 8-13.)

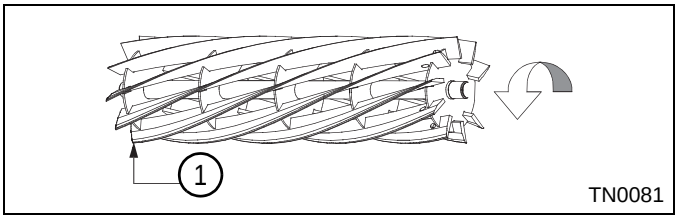

Figure 8-3

2. Start adjustment at the leading edge (1) of the reel, followed by the trailing edge. The leading edge of the reel blade is the edge that passes over the bedknife first during normal reel rotation.

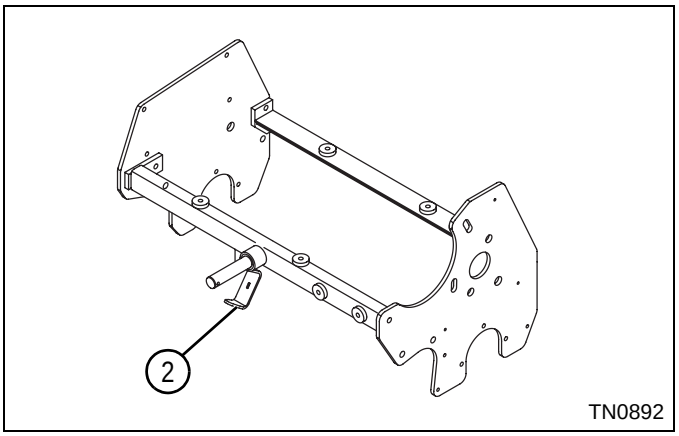

Figure 8-4

NOTICE

Gen-Set Models: Before tipping mower back for service, the fuel lever must be moved to the OFF position to prevent fuel from leaking into the crankcase. Do not leave the mower tipped back for an extended length of time or oil may migrate into the combustion chamber.

3. Additional access to bedknife adjusting hardware can be obtained by pressing the limit bracket (2) away from the reel as the mower is tipped back. This allows the back side of the reel to pivot down and away from the frame.

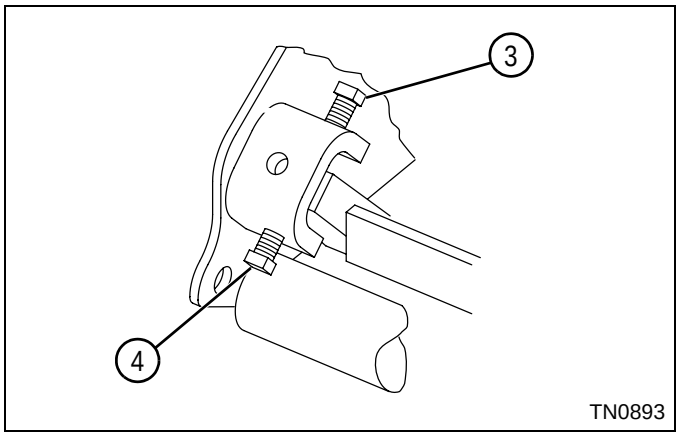

Figure 8-5

CAUTION

To prevent personal injury and damage to cutting edges, handle the reel with extreme care.

4. Use adjusters (3 and 4) to adjust gap. Loosen bottom adjuster (4) and turn top adjuster (3) down (clockwise) to close gap.
   a. Slide a feeler gauge or shim stock 0.001–0.003 in. (0.025–0.075 mm) between the reel blade and the bedknife. Do not turn the reel.
   b. Adjust the trailing edge of the reel in the same manner, then recheck the adjustment at the leading edge.
   c. When the reel and bedknife are properly adjusted, the reel will spin freely and will cut a piece of newspaper along the full length of the reel when the paper is held at 90° to the bedknife.
5. Return mower to upright position. Limit bracket (2) is spring loaded and should latch into bracket on reel.

Battery Tray Adjustment

See Figure 8-6.

1. Park the mower safely. (See “Park Mower Safely” on page 1-5.)
2. Remove battery pack. (See “Battery Pack” on page 4-56.)

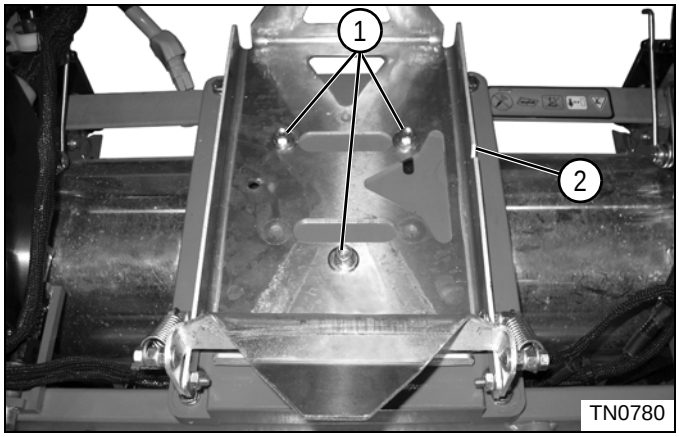

Figure 8-6

3. Loosen nuts (1) and slide battery tray (2) forward to increase the weight over the front roller.
4. Move battery tray (2) backward to decrease the weight over the front roller.
5. Tighten nuts (1) and install battery pack. (See “Battery Pack” on page 4-56.)

Engine Fore/Aft Adjustment

See Figure 8-7.

1. Park the mower safely. (See “Park Mower Safely” on page 1-5.)

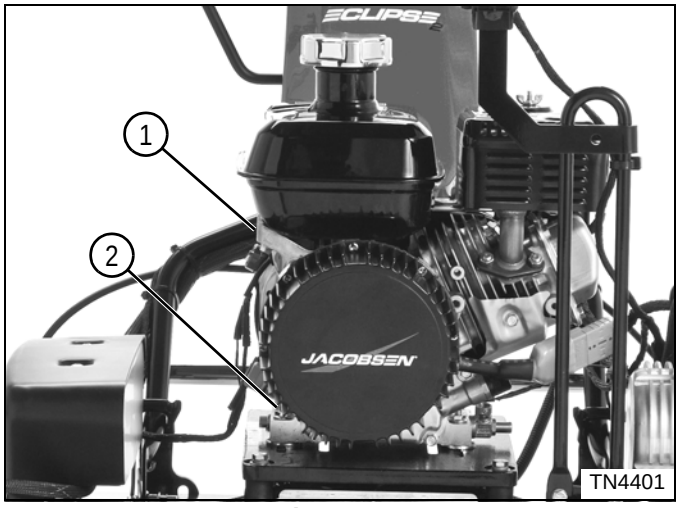

Figure 8-7

2. Loosen four engine mount nuts (2) and slide engine assembly (1) forward to increase the weight over the front roller.
3. Move engine assembly (1) backward to decrease the weight over the front roller.
4. Tighten engine mount nuts (2).

Backlapping Procedure

See Figures 8-8 through 8-14.

Whenever a reel and bedknife have been ground, or a new reel or bedknife has been installed, the assembled reel should be backlapped.

Required Tools and Materials
• Lapping Compound (180 Grit) • Long-Handled Brush

1. Check for damage to the bedknife and reel blades. (See “Reel and Bedknife Inspection” on page 8-13.)
2. Determine if backlapping or grinding will restore the proper cutting edge.
3. For optimum performance, use a bedknife grinder to touch up the blade, then reassemble and adjust the bedknife to the reel. (See “Bedknife-to-Reel Adjustment” on page 8-14.)
4. Start the mower.

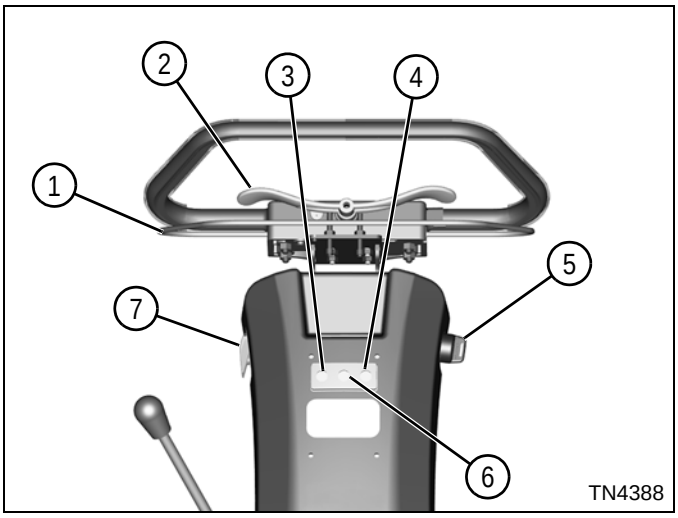

Figure 8-8

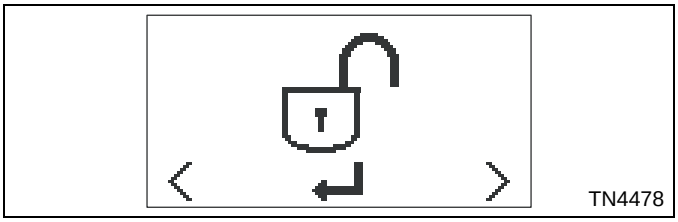

Figure 8-9

5. Press either orange button (3 or 4) until Maintenance Mode PIN screen is displayed.
6. Press black button (6).

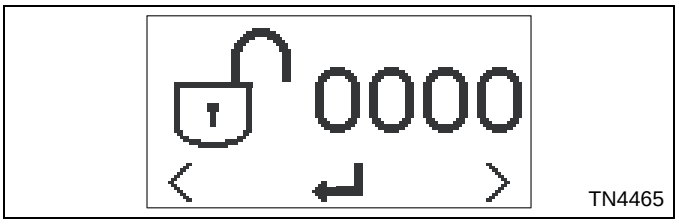

Figure 8-10

The LCD display will prompt the operator to enter the digits for the maintenance mode PIN.

NOTE

The default PIN for maintenance mode is 6789.

7. Use the orange buttons (3 and 4) to select and the black button (6) to enter the digits for the maintenance mode pin. After the correct PIN has been entered, the LCD will be in maintenance mode.

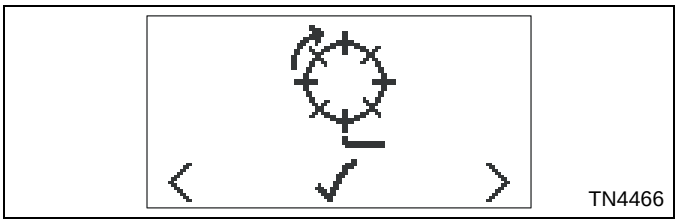

Figure 8-11

8. Use the orange buttons (3 and 4) until the Backlap Select screen is displayed.
9. Press black button (6) to enter backlap mode.

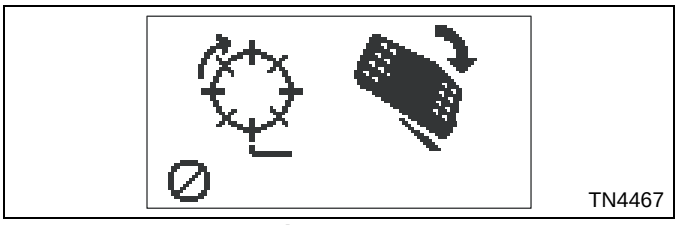

Figure 8-12

The LCD display will prompt the operator to engage the mow switch (7).

10. Place mow switch (7) in the on position. If cancel (Ø) is selected, display will return to the Backlap Select screen.

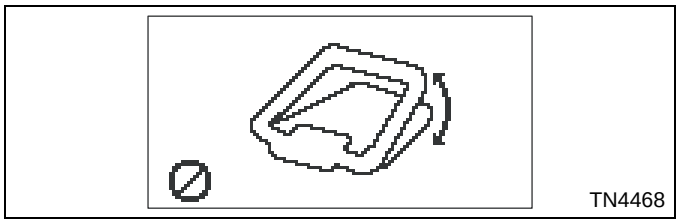

Figure 8-13

The LCD display will prompt the operator to engage and release the Operator Presence Control (OPC) bail (1).

11. Engage and release the OPC bail (1). The reel motor will begin turning, a slow beeping alarm (one beep every 3 seconds) will sound, and a 5-minute timer will start. If cancel (Ø) is selected, display will return to the Backlap Select screen.

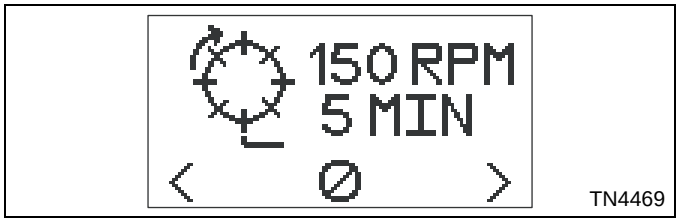

Figure 8-14

The LCD display will prompt the operator to adjust the reel speed.

12. Use the orange buttons (3 and 4) to adjust the reel speed between 150–400 rpm. Press the black button (6) to cancel (Ø) backlap.
13. Apply lapping compound with a long-handled brush along the entire length of the reel (180 grit is recommended).
14. Exit backlap mode by allowing the 5-minute timer to expire, selecting cancel (Ø) on the LCD display, placing the mow switch (7) in the off position, moving the OPC bail (1), moving the speed paddle (2), or turning the key switch (5) to the off position.
15. Move the mow switch (7) to the off position, stop engine (if equipped), and move key switch (5) to the off position. Disconnect the gen-set/battery pack connector.
16. Carefully and thoroughly remove all lapping compound from reel and bedknife before running the reel in the forward direction.

Height-of-Cut Adjustment (HOC)

See Figure 8-15.

CAUTION

To prevent personal injury and damage to the cutting edges, handle the reel with extreme care.

Required Tools
Height-of-Cut Gauge Bar (Jacobsen PN 158568)

1. Park the mower safely. (See “Park Mower Safely” on page 1-5.)

NOTE

The bedknife-to-reel clearance should be properly adjusted before adjusting the cutting height. (See “Bedknife-to-Reel Adjustment” on page 8-14.)

2. Retract the kickstand and allow the mower to rest on the traction roller or transport wheels.

NOTICE

Gen-Set Models: Before tipping mower back for service, the fuel lever must be moved to the OFF position to prevent fuel from leaking into the crankcase. Do not leave the mower tipped back for an extended length of time or oil may migrate into the combustion chamber.

3. Tip mower back on traction drum or tires. Support the mower to prevent it from tipping

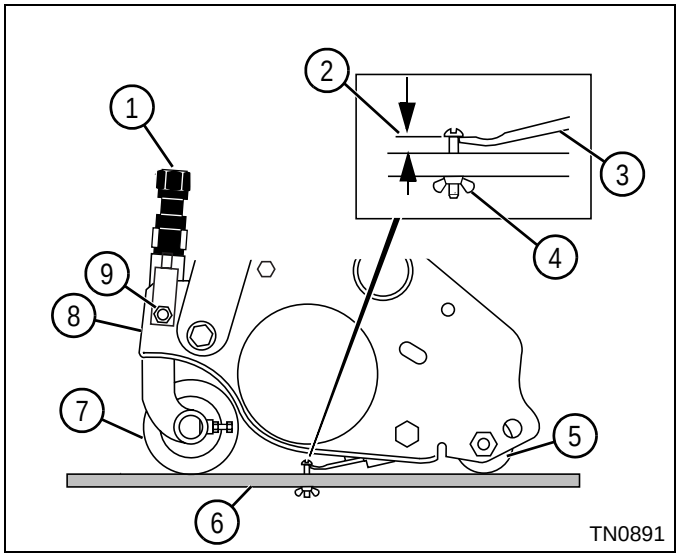

Figure 8-15

4. Loosen lock nut (9) on the side of front roller bracket (8) just enough to allow adjusting knob (1) to raise or lower the bracket.
5. Set height-of-cut bar (6) to desired height-of-cut (2) by measuring between the underside of screw head and height-of-cut bar surface and tighten wing nut (4).
6. Place height-of-cut bar (6) across bottom of front and rear rollers (7 and 5) near one end.
7. Slide the head of the gauge screw over the bedknife (3).
8. Turn adjusting knob (1) to close the gap between the front and rear rollers (7 and 5) and height-of-cut bar (6).
9. Tighten lock nut (9).
10. Repeat steps 4 through 9 on opposite end of front roller (7).
11. Recheck each end with height-of-cut bar and readjust as necessary.

Reel Bearing Pre-Load Adjustment

See Figures 8-16 through 8-20.

1. Park the mower safely. (See “Park Mower Safely” on page 1-5.)
2. Back the bedknife away from the reel. (See “Bedknife-to-Reel Adjustment” on page 8-14.)

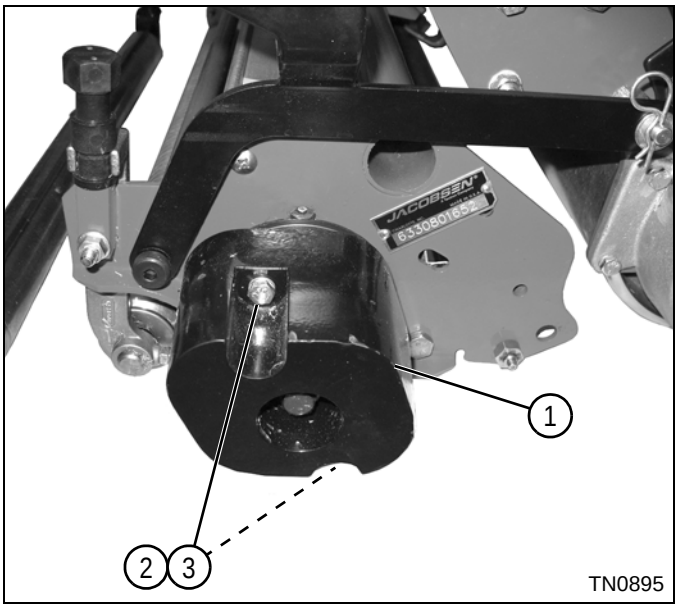

Figure 8-16

3. Remove two screws (2) and lock washers (3). Remove counterweight (1).

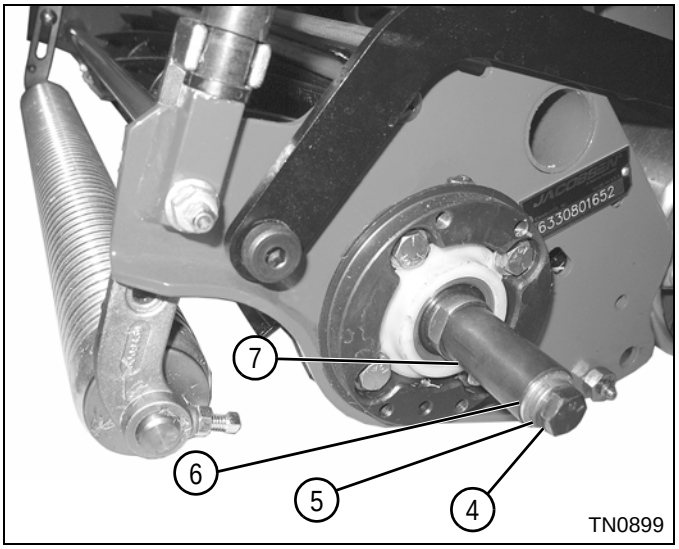

Figure 8-17

4. Remove screw (4), lock washer (5), and washer (6).
5. Remove spacer (7).

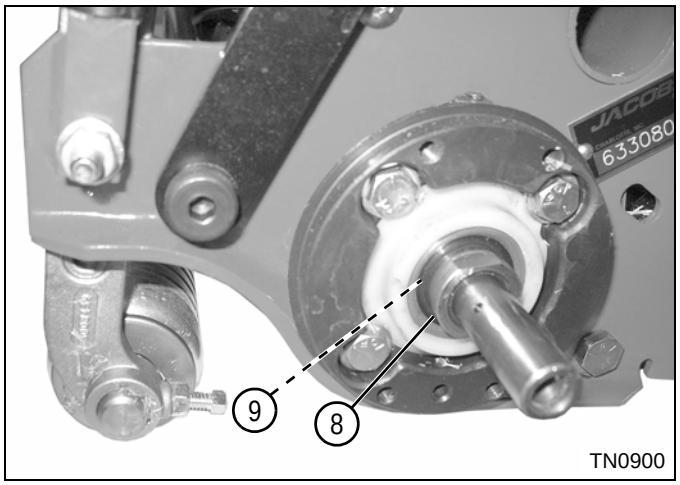

Figure 8-18

6. Tighten adjuster nut (8) until the spring (9) is collapsed, then back the nut out two or three turns, or until there is 0.040 in. (1.27 mm) side-to-side movement of the reel.

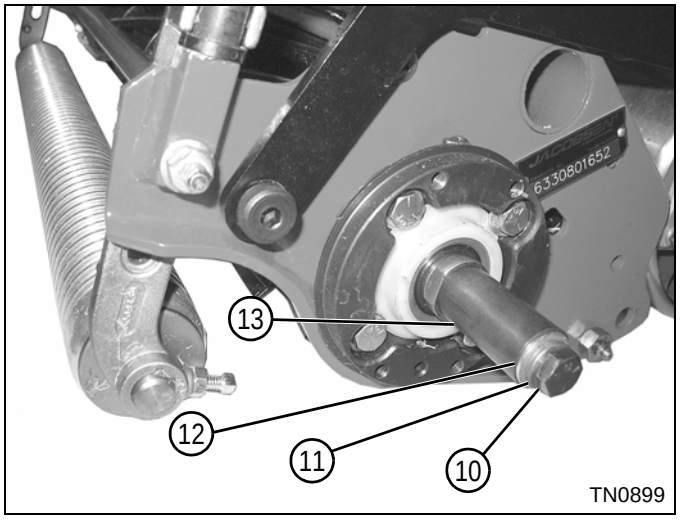

Figure 8-19

7. Install spacer (13), washer (12), lock washer (11), and screw (10).

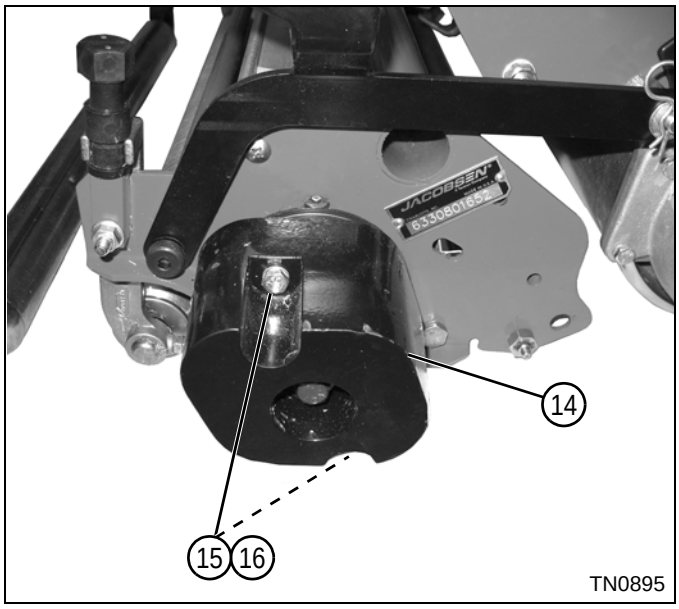

Figure 8-20

8. Install counterweight (14) and two screws (15) and lock washers (16).
9. Adjust bedknife-to-reel contact. (See “Bedknife-to-Reel Adjustment” on page 8-14.)

Grass Shield Adjustment

See Figure 8-21.

1. Park the mower safely. (See “Park Mower Safely” on page 1-5.)

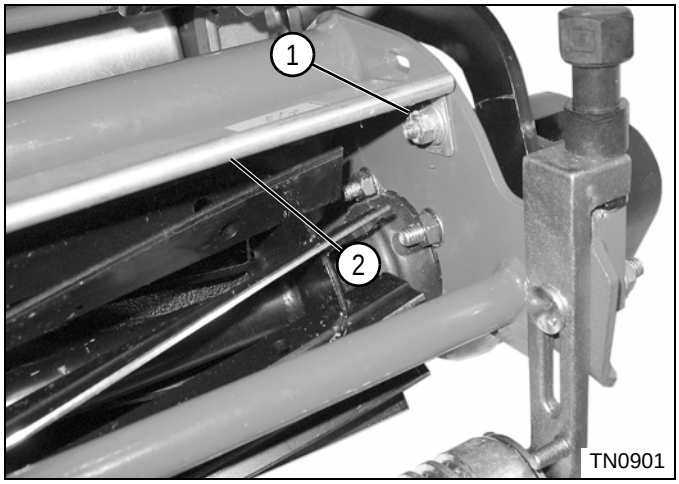

Figure 8-21

2. Loosen nut (1) on each end of grass shield (2) and adjust grass shield as close to reel blades as possible without making contact.
3. Tighten nut (1) on each end of grass shield.

Repair

Cutting Unit

Removal and Installation

See Figures 8-22 through 8-24.

1. Park the mower safely. (See “Park Mower Safely” on page 1-5.)
2. Retract the kickstand and allow the mower to rest on the traction roller or transport wheels.
3. Remove light kit assembly (if equipped). (See “Light Kit Assembly” on page 10-8.)

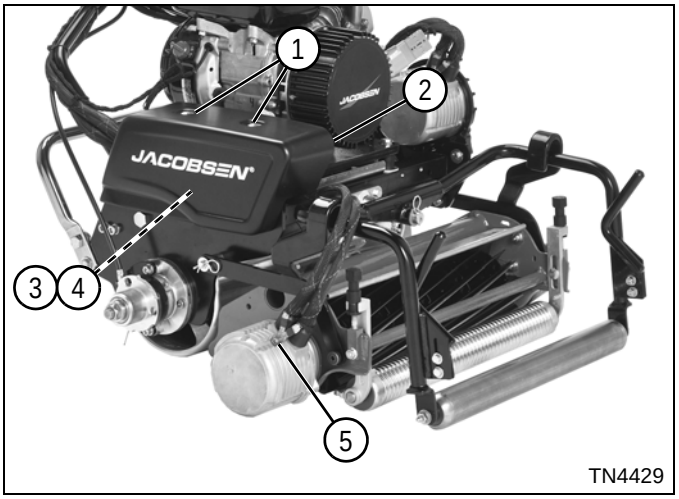

Figure 8-22

NOTE

Label wire connectors before disconnecting to ensure correct installation.

4. Remove screws (1) and motor controller cover (2), and disconnect reel motor wire harness connectors (3 and 4) at the motor controller.
5. Disconnect ground lead terminal (5).

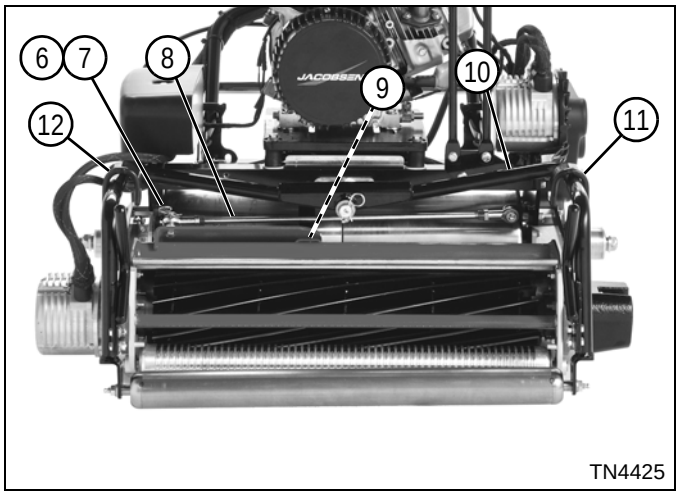

Figure 8-23

6. Remove clip (6) and washer (7).
7. Disconnect rod (8).

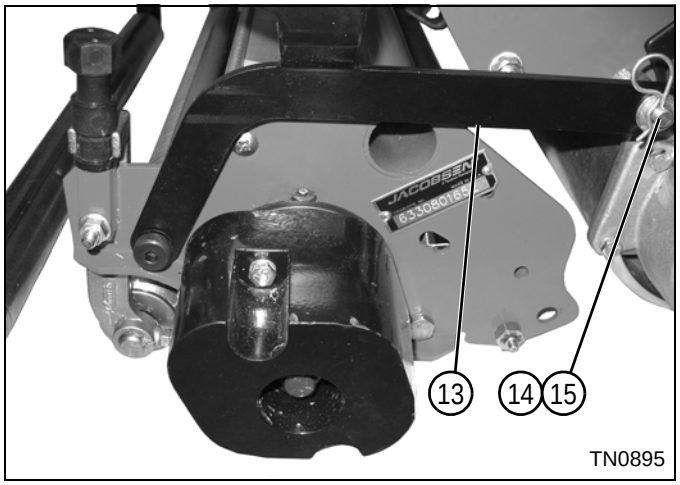

Figure 8-24

8. Remove clips (14) and washers (15) from each side of the mower.
9. Disconnect arms (13) from each side of the mower.
10. Disconnect arms (11 and 12) from roller mount (10).

NOTICE

Gen-Set Models: Before tipping mower back for service, the fuel lever must be moved to the OFF position to prevent fuel from leaking into the crankcase. Do not leave the mower tipped back for an extended length of time or oil may migrate into the combustion chamber.

11. Push the limit bracket (9) in and tip mower back on the traction drum or tires. Support the mower to prevent it from tipping.

12. Remove cutting unit.

Installation Note

Install cutting unit by reversing the order of removal.

Grass Shield

Removal and Installation

See Figure 8-25.

1. Park the mower safely. (See “Park Mower Safely” on page 1-5.)

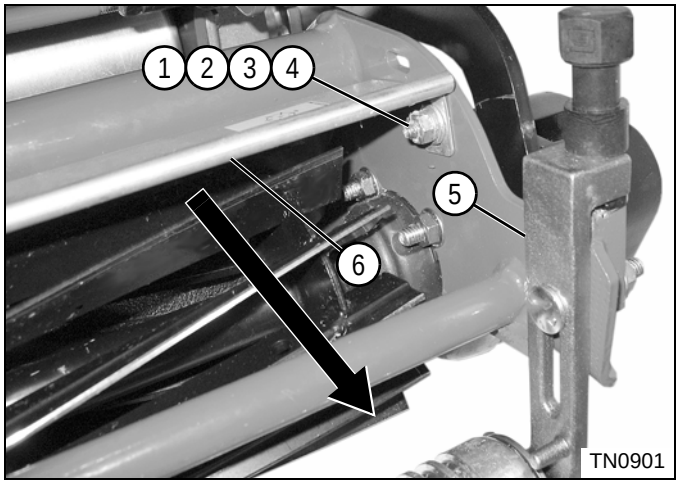

Figure 8-25

2. Remove the cutting unit front roller (5). (See “Cutting Unit Front Roller” on page 8-33.)
3. Remove nut (1), lock washer (2), flat washer (3), and screw (4) from each side of the mower.
4. Pull grass shield (6) forward and remove from mower.

Installation Note

Install grass shield by reversing the order of removal.

Bedknife Backing Assembly

Removal

See Figures 8-26 through 8-28.

1. Park the mower safely. (See “Park Mower Safely” on page 1-5.)
2. Remove cutting unit from mower. (See “Cutting Unit” on page 8-20.)

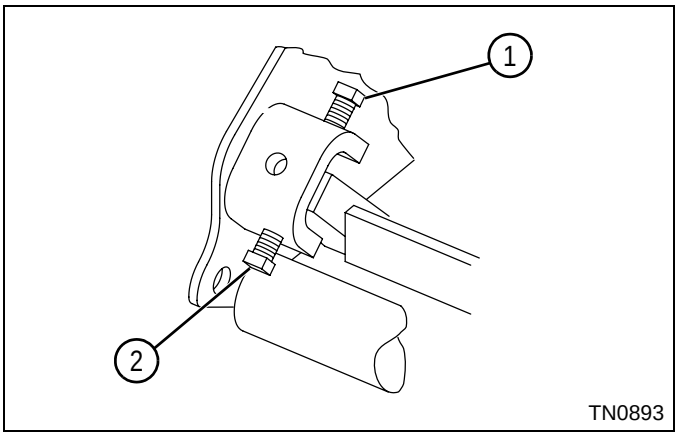

Figure 8-26

NOTE

Steps 3 through 5 apply to both sides of the mower.

3. Loosen bedknife adjuster screws (1 and 2).

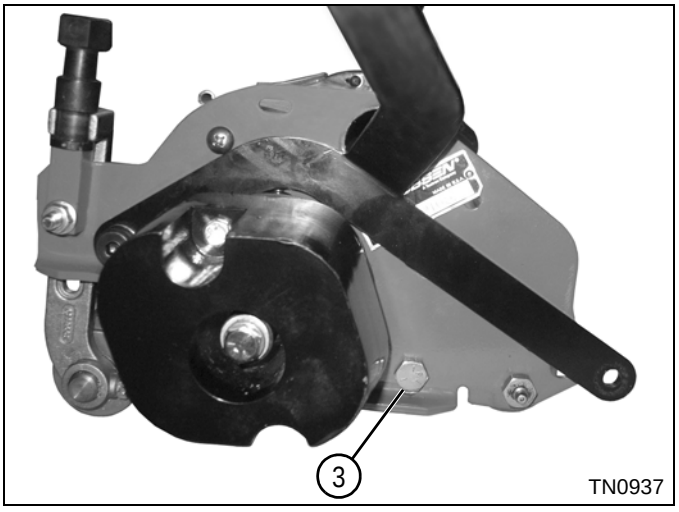

Figure 8-27

4. Remove the bedknife backing mounting screws (3).

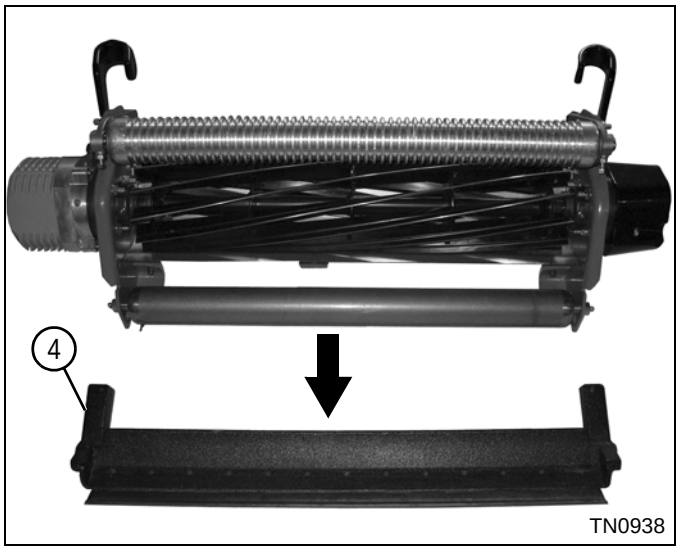

Figure 8-28

5. Remove the bedknife backing assembly (4).

Installation

See Figures 8-29 through 8-31.

Required Materials
Anti-Seize Compound

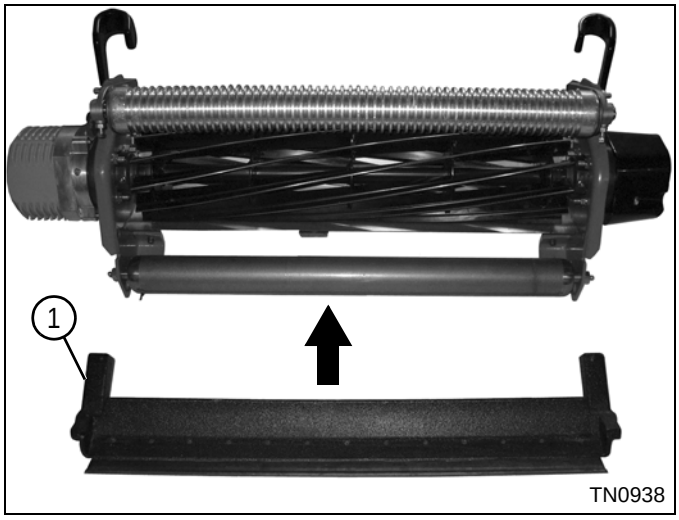

Figure 8-29

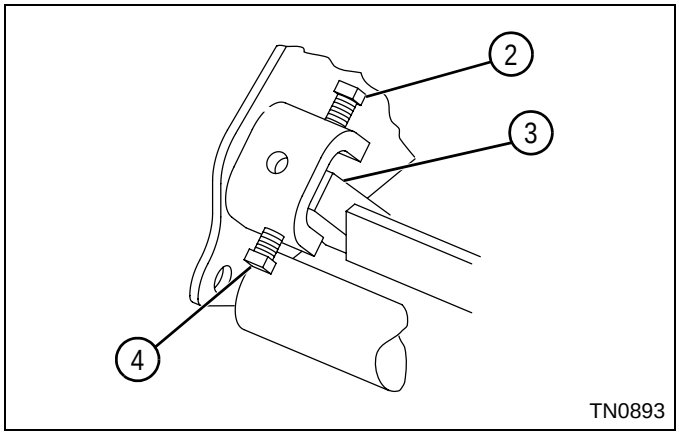

Figure 8-30

NOTE

Steps 1 through 3 apply to both sides of the mower.

1. Install the bedknife backing assembly (1), positioning the top of the bedknife backing (3) between the two adjuster screws (2 and 4).

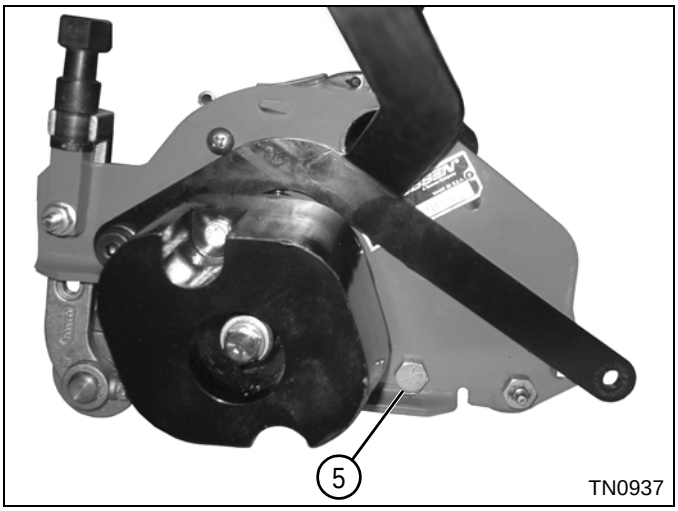

Figure 8-31

NOTES

Apply anti-seize compound to the threads of the bedknife backing mounting screws (5) before installing.

2. Install the bedknife backing mounting screws (5) in the frame and bedknife backing.
3. Adjust bedknife. (See “Bedknife-to-Reel Adjustment” on page 8-14.)
4. Install the cutting unit to mower. (See “Cutting Unit” on page 8-20.)

Bedknife

Removal and Installation

NOTE

This procedure is intended for use with machines equipped with standard fastener type bedknives. For machines equipped with an optional MAGKnife™ bedknife system, adjustments are similar, but the bedknife is secured to the bedknife backing by a series of magnets and aligned by dowel pins rather than being secured by screws.

See Figure 8-32.

1. Park the mower safely. (See “Park Mower Safely” on page 1-5.)

NOTICE

Gen-Set Models: Before tipping mower back for service, the fuel lever must be moved to the OFF position to prevent fuel from leaking into the crankcase. Do not leave the mower tipped back for an extended length of time or oil may migrate into the combustion chamber.

2. Remove bedknife backing assembly. (See “Bedknife Backing Assembly” on page 8-22.)

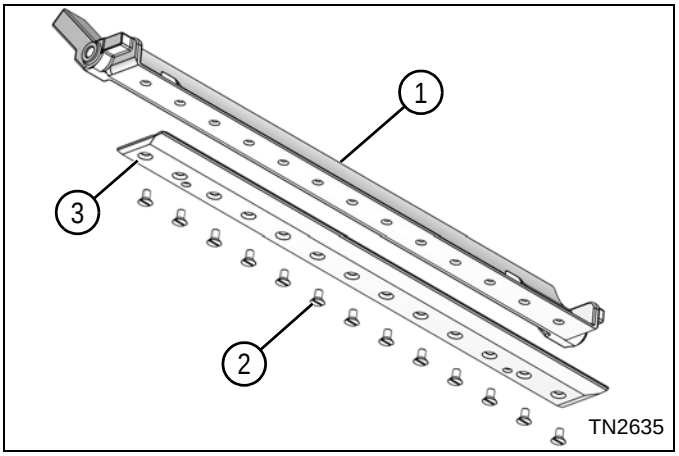

Figure 8-32

3. Remove thirteen screws (2) and bedknife (3) from the bedknife backing (1).

Installation Notes

Required Materials
Anti-Seize Compound

- *Install bedknife by reversing the order of removal.*
- *Apply anti-seize compound to screws (2).*
- *Tighten screws (2) to 90–120 lb-in. (10.2–13.6 N·m), starting with screws in the center and working out to the ends of the bedknife.*
- *Grind bedknife after assembling to bedknife backing as specified below for the specific bedknife installed:*

Bedknife Specifications		
Bedknife Front Face Height (minimum)	in. (mm)	0.035 (0.9)
Bedknife Front Face Angle (all bedknives)	degrees	5
Bedknife Top Face Angle (rear relief) (all bedknives except Super Tournament)	degrees	8–10
Super Tournament Bedknife Top Face Angle (rear relief)	degrees	5–7

- *Adjust bedknife-to-reel gap. (See “Bedknife-to-Reel Adjustment” on page 8-14.)*

Right Reel Bearing Housing Assembly

Removal

See Figures 8-33 through 8-35.

Required Tools or Equipment
Reel Bearing Housing Puller (Jacobsen PN JAC5085)

1. Park the mower safely. (See “Park Mower Safely” on page 1-5.)
2. Remove cutting unit from mower. (See “Cutting Unit” on page 8-20.)
3. Remove cutting unit front roller. (See “Cutting Unit Front Roller” on page 8-33.)
4. Remove grass shield. (See “Grass Shield” on page 8-21.)
5. Remove reel motor. (See “Reel Motor Test” on page 4-53.)

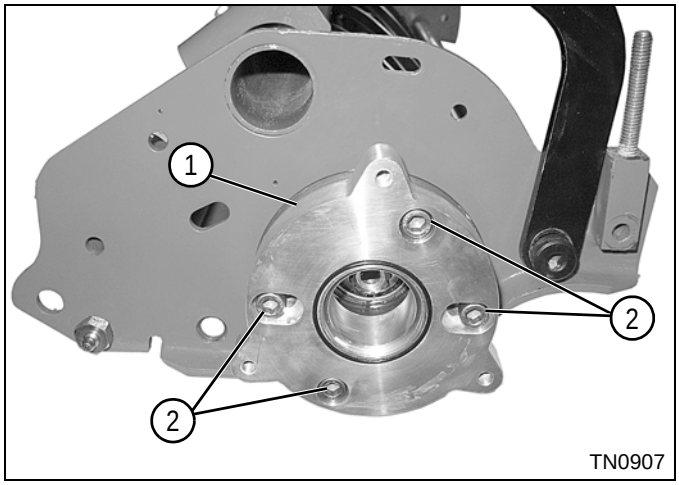

Figure 8-33

6. Remove screws (2) and adapter plate (1).

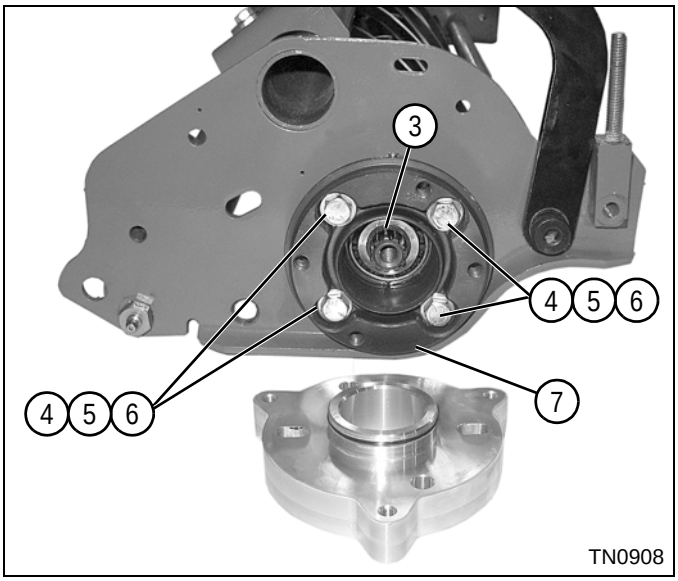

Figure 8-34

7. Remove snap ring (3).
8. Remove screws (4), washers (5), and nuts (6).

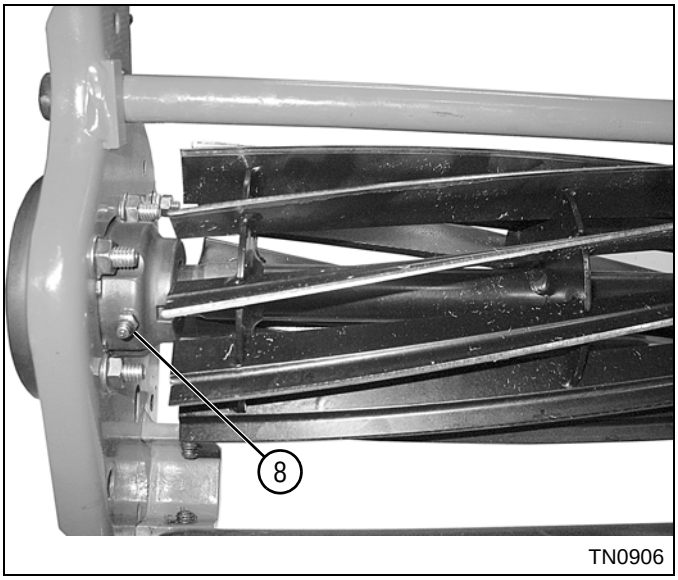

Figure 8-35

9. Rotate reel bearing housing (7) to align grease fitting (8) with the clearance hole in the frame, and remove reel bearing housing from frame using reel bearing housing puller (Jacobsen PN JAC5085).
10. Inspect the reel shaft for wear or damage. Replace reel if needed. (See “Reel Assembly” on page 8-31.)

Disassembly and Assembly

See Figure 8-36.

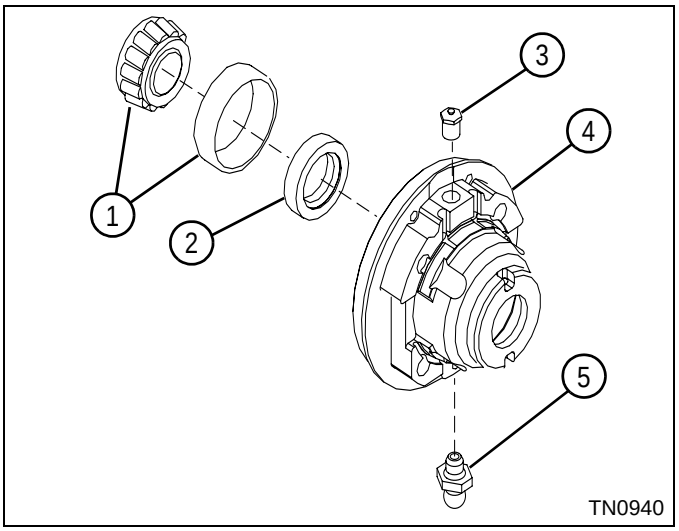

1	Bearing Cup and Cone	4	Reel Bearing Housing
2	Grease Seal	5	Grease Fitting
3	Vent Fitting		

Figure 8-36

Assembly Notes

- *Install a new grease seal (2).*
- *Inspect the bearing cup and cone (1) for wear or damage. Replace as needed.*
- *Pack bearing (1) with grease that meets or exceeds NLGI Grade 2 LB specifications before assembly.*
- *Apply grease that meets or exceeds NLGI Grade 2 LB specifications to the lips of the grease seal (2).*

Installation

See Figures 8-37 and 8-38.

Required Tools or Equipment
Bearing Assembly Tool (Jacobsen PN JAC5084)

Required Materials
Loctite® 242 (Blue) Thread Sealant

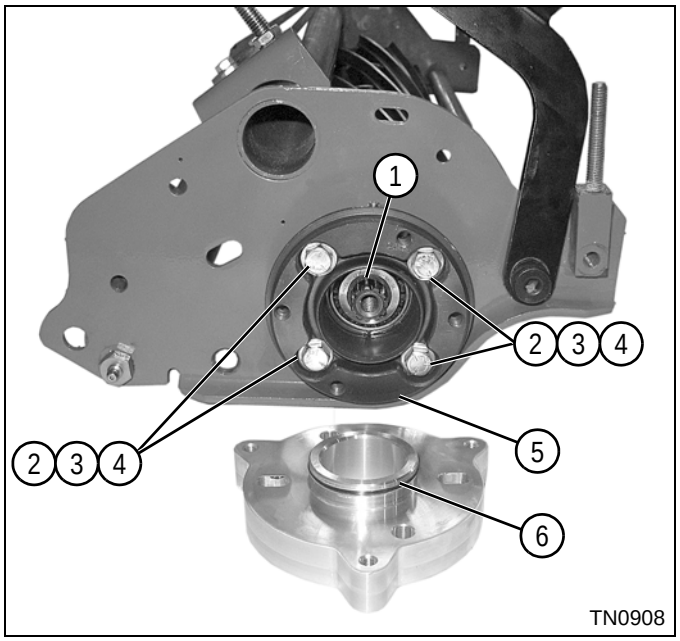

Figure 8-37

NOTE

Always use new O-rings and seals.

1. Install reel bearing housing assembly (5).
2. Install bearing using bearing assembly tool (Jacobsen PN JAC5084) and install snap ring (1).
3. Install screws (2), washers (3), and nuts (4).
4. Install O-ring (6), and lubricate with grease that meets or exceeds NLGI Grade 2 LB specifications.

8

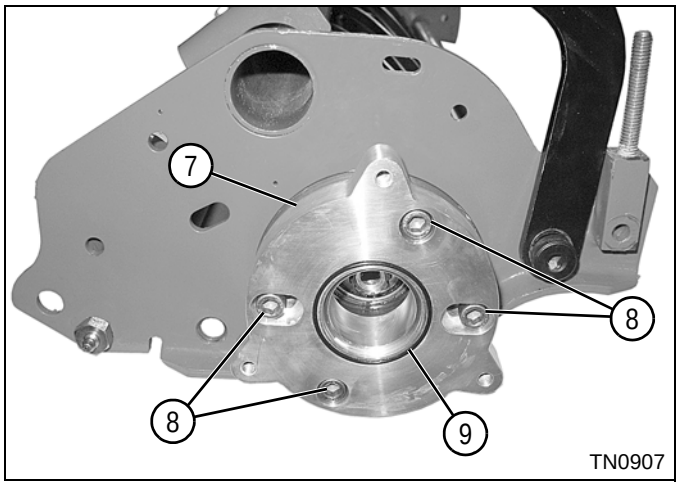

Figure 8-38

NOTE

Apply Loctite® 242 (Blue) to the threads of screws (8) before installing.

5. Install adapter plate (7) using screws (8).
6. Install O-ring (9), and lubricate with grease that meets or exceeds NLGI Grade 2 LB specifications.
7. Install reel motor. (See “Reel Motor Test” on page 4-53.)
8. Lubricate grease fitting with grease that meets or exceeds NLGI Grade 2 LB specifications. Clean grease fittings before lubricating and apply grease to the fittings with a hand grease gun only. Pump the gun slowly until a slight amount of pressure is felt, then stop—do not over-grease. Do not use compressed air gun.
9. Install grass shield. (See “Grass Shield” on page 8-21.)
10. Install cutting unit front roller. (See “Cutting Unit Front Roller” on page 8-33.)
11. Install cutting unit to mower. (See “Cutting Unit” on page 8-20.)

Left Reel Bearing Housing Assembly

Removal

See Figures 8-39 through 8-41.

Required Tools or Equipment
Reel Bearing Housing Puller (Jacobsen PN JAC5085)

1. Park the mower safely. (See “Park Mower Safely” on page 1-5.)
2. Remove cutting unit from mower. (See “Cutting Unit” on page 8-20.)
3. Remove cutting unit front roller. (See “Cutting Unit Front Roller” on page 8-33.)
4. Remove grass shield. (See “Grass Shield” on page 8-21.)

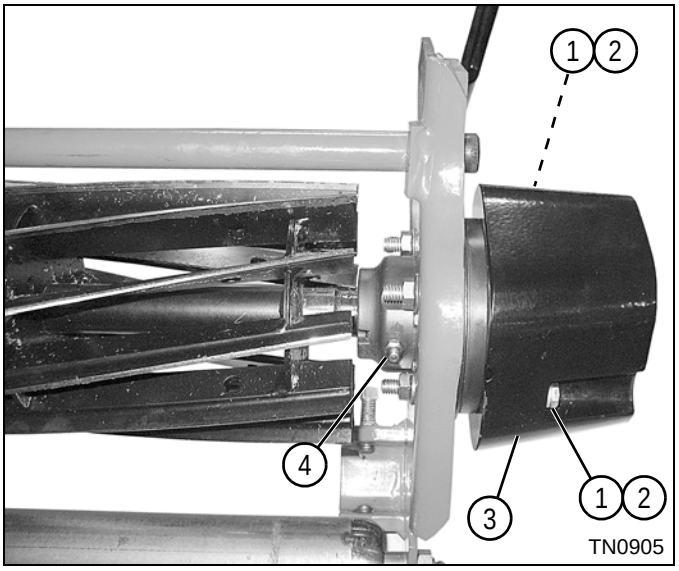

Figure 8-39

5. Remove screws (1) and washers (2).
6. Remove counterweight (3).

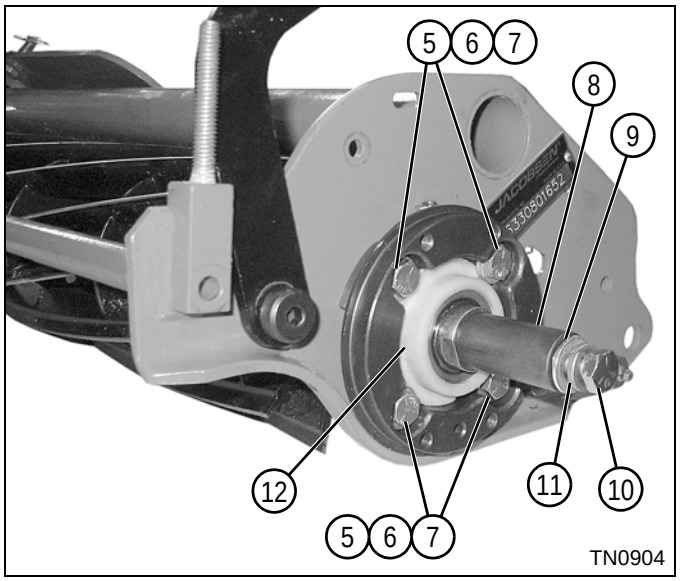

Figure 8-40

7. Remove screw (10), lock washer (11), washer (9), and spacer (8).
8. Remove screws (5), washers (6), and nuts (7).
9. Remove seal (12).

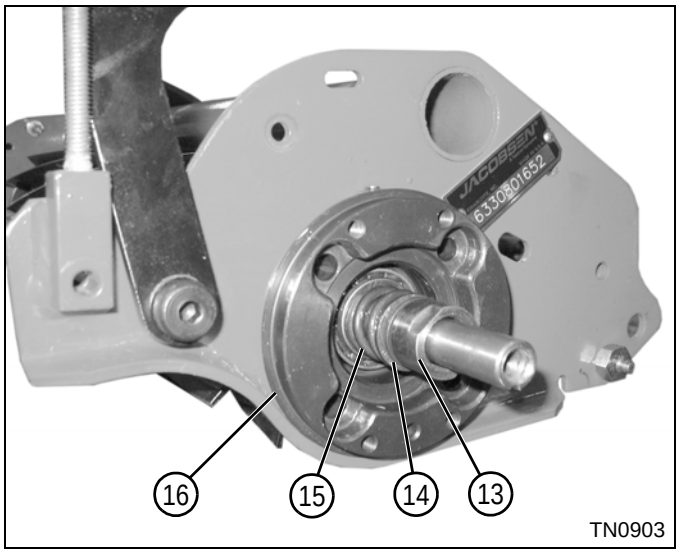

Figure 8-41

10. Remove nut (13).
11. Remove washer (14) and spring (15).
12. Rotate reel bearing housing (16) to align grease fitting (4) with the clearance hole in the frame, and remove reel bearing housing from frame using reel bearing housing puller (Jacobsen PN JAC5085).
13. Inspect the reel shaft for wear or damage. Replace reel if needed. (See “Reel Assembly” on page 8-31.)

Disassembly and Assembly

See Figure 8-42.

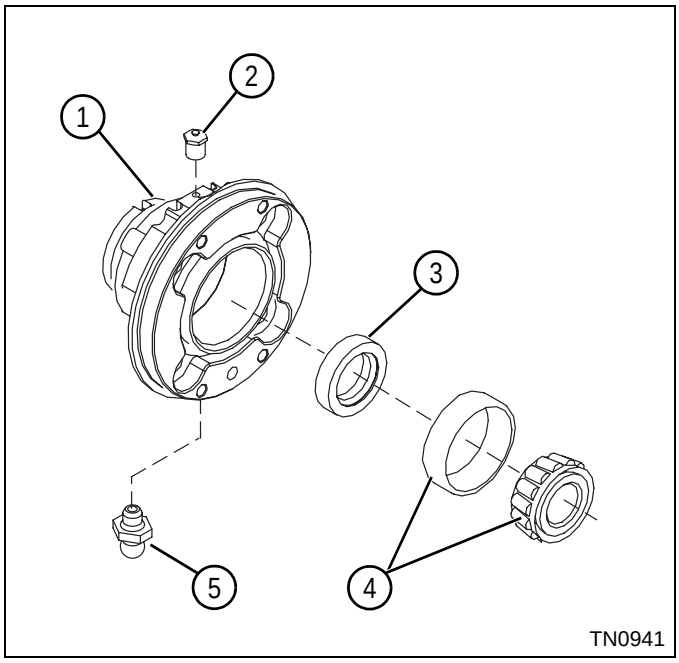

1	Bearing Housing	4	Bearing Cup and Cone
2	Vent Fitting	5	Grease Fitting
3	Grease Seal		

Figure 8-42

Assembly Notes

- *Clean and inspect the bearing cup and cone (4) for wear and damage. Replace as needed.*
- *Pack bearing (4) with grease that meets or exceeds NLGI Grade 2 LB specifications before assembly.*
- *Install a new grease seal (3).*
- *Apply grease that meets or exceeds NLGI Grade 2 LB specifications to the lips of the grease seal (3).*

Installation

See Figures 8-43 through 8-45.

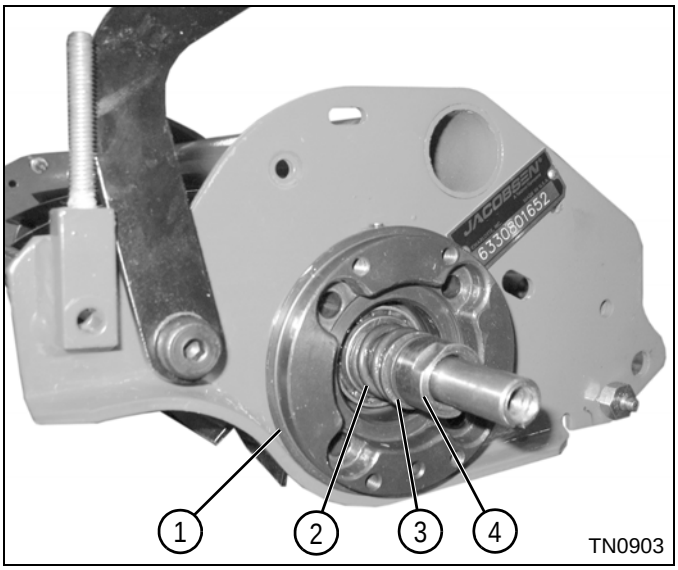

Figure 8-43

1. Install reel bearing housing assembly (1).
2. Install spring (2), washer (3), and nut (4).

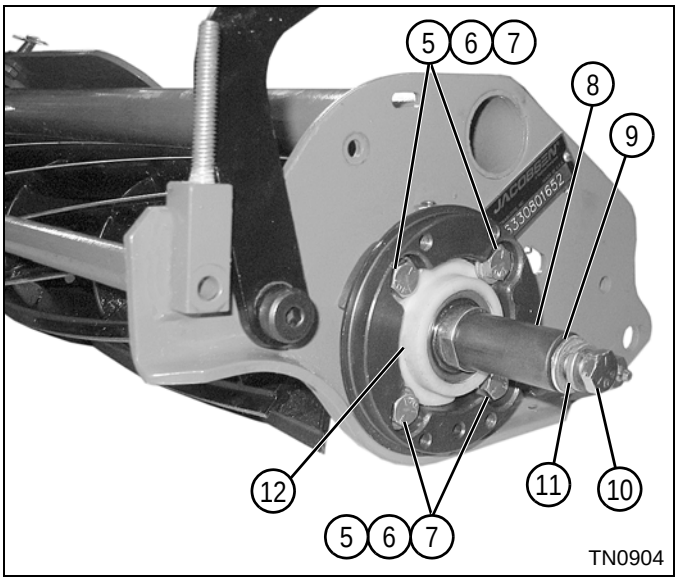

Figure 8-44

3. Install seal (12) using screws (5), washers (6), and nuts (7).
4. Adjust the reel bearing pre-load. (See “Reel Bearing Pre-Load Adjustment” on page 8-18.)
5. Install spacer (8), washer (9), lock washer (11), and screw (10).

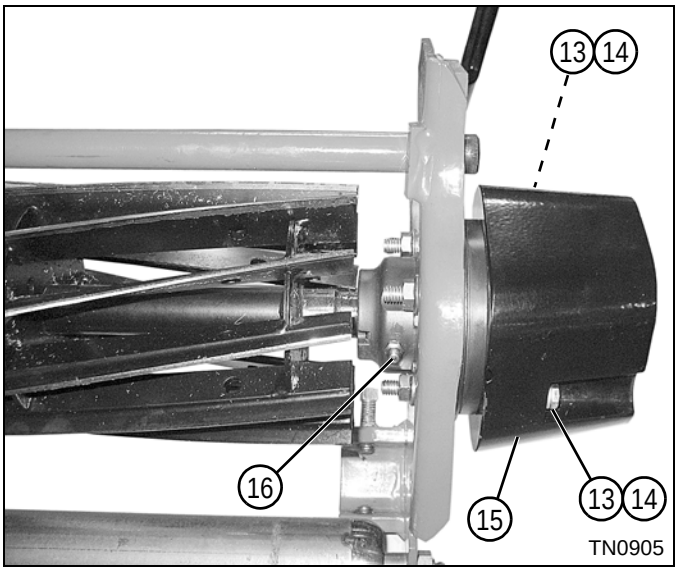

Figure 8-45

6. Install counterweight (15) using screws (13) and washers (14).
7. Lubricate grease fitting (16) with grease that meets or exceeds NLGI Grade 2 LB specifications. Clean grease fittings before lubricating and apply grease to the fittings with a hand grease gun only. Pump the gun slowly until a slight amount of pressure is felt, then stop—do not over-grease. Do not use compressed air gun.
8. Install grass shield. (See “Grass Shield” on page 8-21.)
9. Install cutting unit front roller. (See “Cutting Unit Front Roller” on page 8-33.)
10. Install cutting unit to mower. (See “Cutting Unit” on page 8-20.)

Reel Assembly

Removal

See Figure 8-46.

1. Park the mower safely. (See “Park Mower Safely” on page 1-5.)

NOTICE

Gen-Set Models: Before tipping mower back for service, the fuel lever must be moved to the OFF position to prevent fuel from leaking into the crankcase. Do not leave the mower tipped back for an extended length of time or oil may migrate into the combustion chamber.

2. Remove cutting unit from mower. (See “Cutting Unit” on page 8-20.)
3. Remove bedknife backing assembly. (See “Bedknife Backing Assembly” on page 8-22.)
4. Remove cutting unit front roller. (See “Cutting Unit Front Roller” on page 8-33.)
5. Remove grass shield. (See “Grass Shield” on page 8-21.)
6. Remove left reel bearing housing assembly. (See “Left Reel Bearing Housing Assembly” on page 8-28.)
7. Remove right reel bearing housing assembly. (See “Right Reel Bearing Housing Assembly” on page 8-25.)

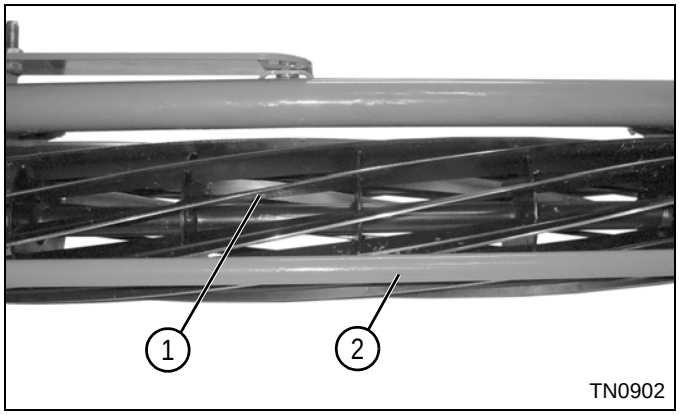

Figure 8-46

CAUTION

To prevent personal injury and damage to the cutting edges, handle the reel with extreme care.

8. Remove the reel (1) from the frame (2).

Installation

See Figure 8-47.

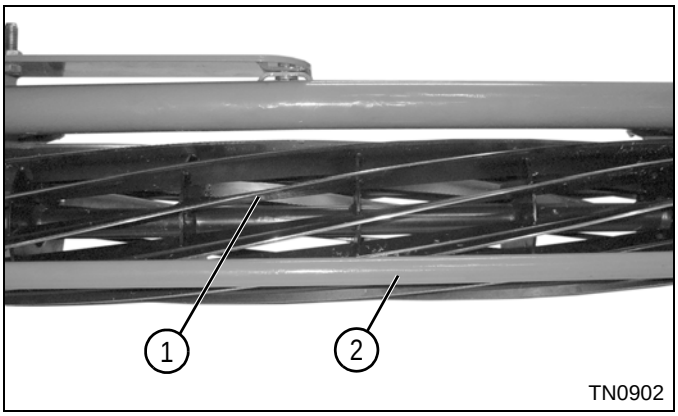

Figure 8-47

CAUTION

To prevent personal injury and damage to the cutting edges, handle the reel with extreme care.

NOTICE

Gen-Set Models: Before tipping mower back for service, the fuel lever must be moved to the OFF position to prevent fuel from leaking into the crankcase. Do not leave the mower tipped back for an extended length of time or oil may migrate into the combustion chamber.

1. Install reel (1) into frame (2).
2. Install the right reel bearing housing. (See “Right Reel Bearing Housing Assembly” on page 8-25.)
3. Install the left reel bearing housing. (See “Left Reel Bearing Housing Assembly” on page 8-28.)
4. Adjust the reel bearing pre-load. (See “Reel Bearing Pre-Load Adjustment” on page 8-18.)
5. Install grass shield. (See “Grass Shield” on page 8-21.)
6. Install cutting unit front roller. (See “Cutting Unit Front Roller” on page 8-33.)
7. Install bedknife backing assembly. (See “Bedknife Backing Assembly” on page 8-22.)
8. Install cutting unit to mower. (See “Cutting Unit” on page 8-20.)

Floating Head

Removal and Installation

See Figures 8-48 and 8-49.

1. Park the mower safely. (See “Park Mower Safely” on page 1-5.)

NOTICE

Gen-Set Models: Before tipping mower back for service, the fuel lever must be moved to the OFF position to prevent fuel from leaking into the crankcase. Do not leave the mower tipped back for an extended length of time or oil may migrate into the combustion chamber.

2. Retract the kickstand and allow the mower to rest on the traction roller or transport wheels. Support the mower to prevent it from tipping.

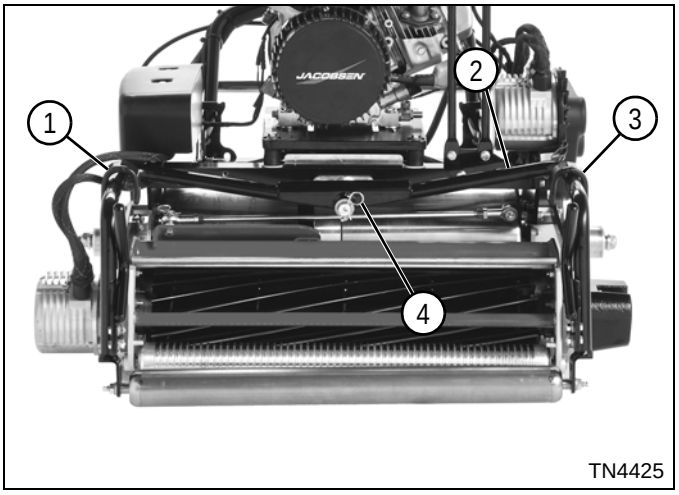

Figure 8-48

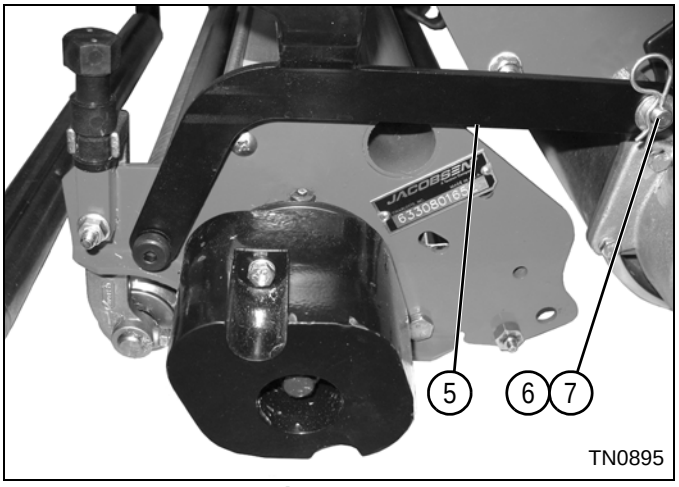

Figure 8-49

3. Remove clip (6) and washer (7) from each side of mower.
4. Disconnect arm (5) from each side of mower.
5. Disconnect arms (1 and 3) from floating head (2).
6. Remove clip (4).
7. Remove floating head (2).

Installation Note

Install floating head by reversing the order of removal.

Cutting Unit Front Roller

Removal and Installation

NOTE

Removal and installation of the cutting unit front roller is described in Chapter 10—Accessories. (See “Cutting Unit Front Roller” on page 10-8.)

Cutting Unit Rear Roller

Removal and Installation

See Figure 8-50.

1. Park the mower safely. (See “Park Mower Safely” on page 1-5.)

NOTICE

Gen-Set Models: Before tipping mower back for service, the fuel lever must be moved to the OFF position to prevent fuel from leaking into the crankcase. Do not leave the mower tipped back for an extended length of time or oil may migrate into the combustion chamber.

2. Tip mower back on traction drum or tires. Support the mower to prevent it from tipping.

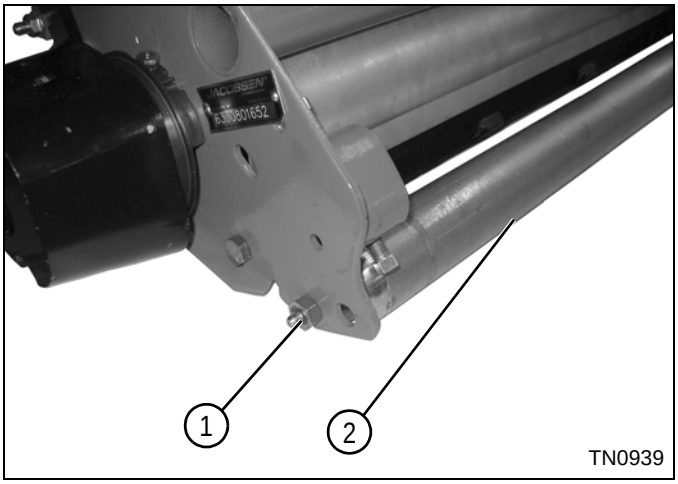

Figure 8-50

3. Remove screw (1) from each side of the mower.
4. Remove cutting unit rear roller (2).

Installation Notes

- *Install cutting unit rear roller by reversing the order of removal.*
- *Lubricate grease fittings with grease that meets or exceeds NLGI Grade 2 LB specifications. Clean grease fittings before lubricating and apply grease to the fittings with a hand grease gun only. Pump the gun slowly until a slight amount of pressure is felt, then stop—do not over-grease. Do not use compressed air gun.*

Floating Head Roller

Removal and Installation

See Figure 8-51.

1. Park the mower safely. (See “Park Mower Safely” on page 1-5.)

NOTICE

Gen-Set Models: Before tipping mower back for service, the fuel lever must be moved to the OFF position to prevent fuel from leaking into the crankcase. Do not leave the mower tipped back for an extended length of time or oil may migrate into the combustion chamber.

2. Tip mower back on traction drum or tires. Support the mower to prevent it from tipping.

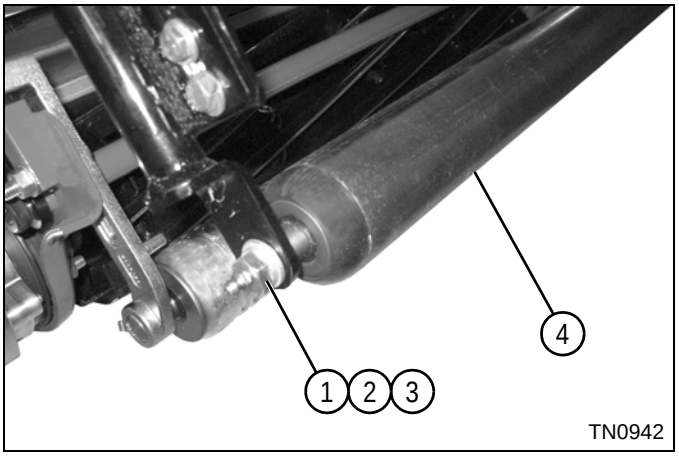

Figure 8-51

3. Remove screw (1), lock washer (2), and washer (3) from each side of the mower.
4. Remove floating head roller (4).

Installation Notes

- *Install floating head roller by reversing the order of removal.*
- *Lubricate grease fittings with grease that meets or exceeds NLGI Grade 2 LB specifications. Clean grease fittings before lubricating and apply grease to the fittings with a hand grease gun only. Pump the gun slowly until a slight amount of pressure is felt, then stop—do not over-grease. Do not use compressed air gun.*

Cutting Unit Rear Roller and Floating Head Roller—Roller Bearings

Removal

See Figure 8-52.

1. Park the mower safely. (See “Park Mower Safely” on page 1-5.)
2. Remove roller. (See (See “Cutting Unit Rear Roller” on page 8-33.) or “Floating Head Roller” on page 8-34.)

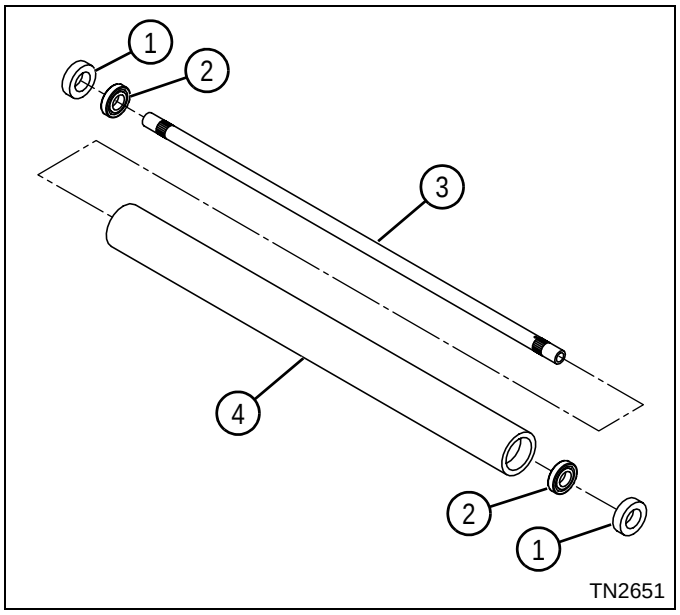

Figure 8-52

3. Using a suitable hammer, support one end of roller (4) and drive the bearing (2) and seal (1) out of roller by tapping opposite end of shaft (3).
4. Remove bearing (2) and seal (1) from shaft (3).
5. Repeat steps 3 and 4 for other end of roller.

Installation

NOTES

- *Pack bearings (2) with grease that meets or exceeds NLGI Grade 2 LB specifications before installation.*
- *Apply grease that meets or exceeds NLGI Grade 2 LB specifications to the lips of the seals (1).*

1. Press one bearing (2) onto end of shaft (3) until it contacts the shoulder on the shaft.
2. Install shaft and bearing assembly to roller (4) and press bearing into roller.
3. Support bearing end of shaft and roller and press the other bearing onto the opposite end of shaft until it contacts the shoulder on the shaft.
4. Install seals (1).

Chapter 9

Miscellaneous

Specifications **9-2**

Repair **9-2**

Transport Wheels (Optional) 9-2

Wheel Hubs and Bearings 9-3

Kickstand Assembly 9-5

9

JACOBSEN
A Textron Company

Specifications

Transport Tires		
Transport Tire Air Pressure	psi (kPa)	6–8 (41–55)

Repair

Transport Wheels (Optional)

Removal and Installation

See Figures 9-1 and 9-2.

1. Park the mower safely. (See “Park Mower Safely” on page 1-5.)

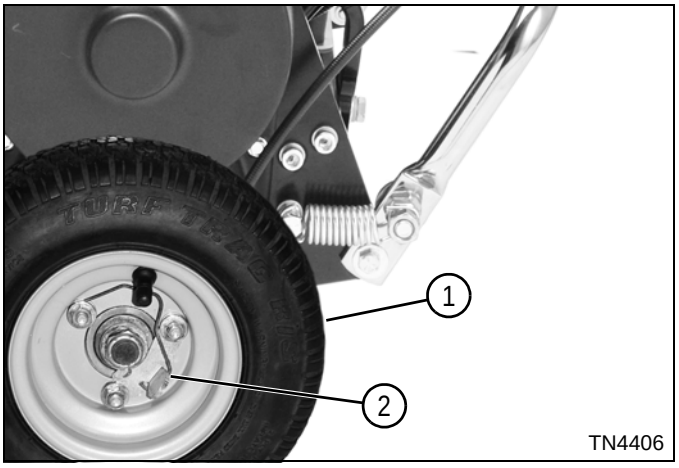

Figure 9-1

2. **To Remove Wheels:** Pull the retaining clip (2) away from the hub and pull wheel (1) off hub.

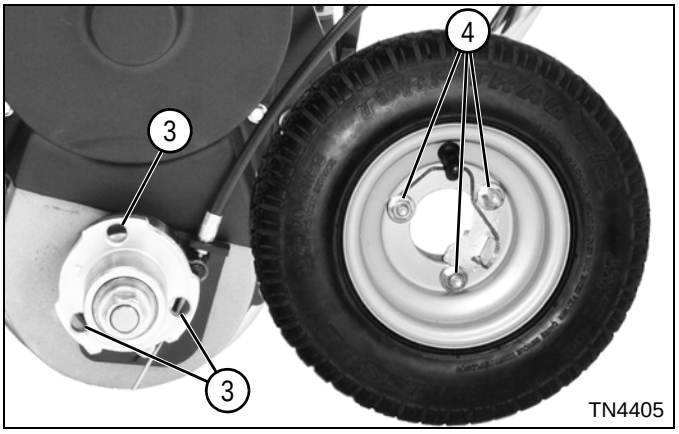

Figure 9-2

3. **To Install Wheels:** Set the park brake, pull the retaining clip back and hold. Place the wheel on the hub and turn the wheel backwards until studs (4) on the rear of wheel line up with holes in the hub (3). Push the wheel in and release the retaining clip.

Disassembly and Assembly

See Figure 9-3.

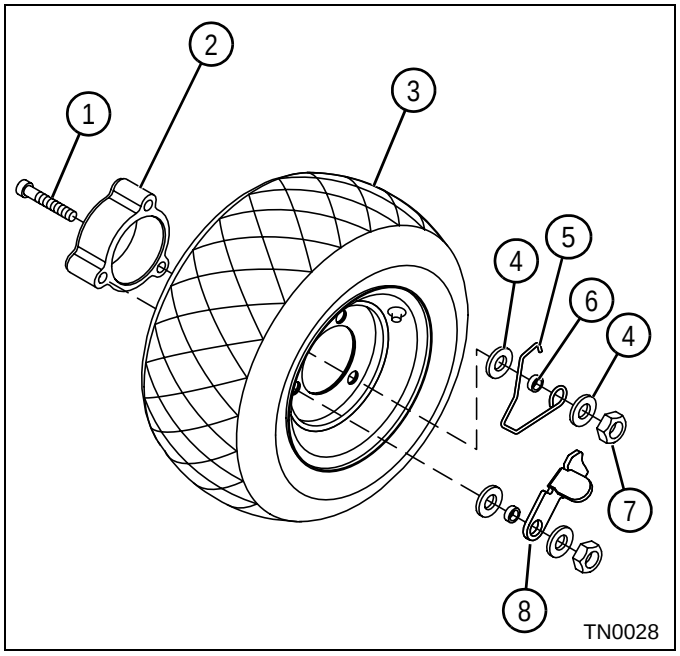

1	Screw (3)	5	Spring
2	Spacer	6	Spacer (3)
3	Wheel and Tire Assembly	7	Lock Nut
4	Flat Washer (6)	8	Latch

Figure 9-3

Wheel Hubs and Bearings

Removal

See Figures 9-4 and 9-5.

NOTE

The hub assemblies are unique to each side and are marked "L" and "R." Do not interchange them side-for-side.

1. Park the mower safely. (See "Park Mower Safely" on page 1-5.)
2. Remove the transport wheels (if equipped). (See "Transport Wheels (Optional)" on page 9-2.)

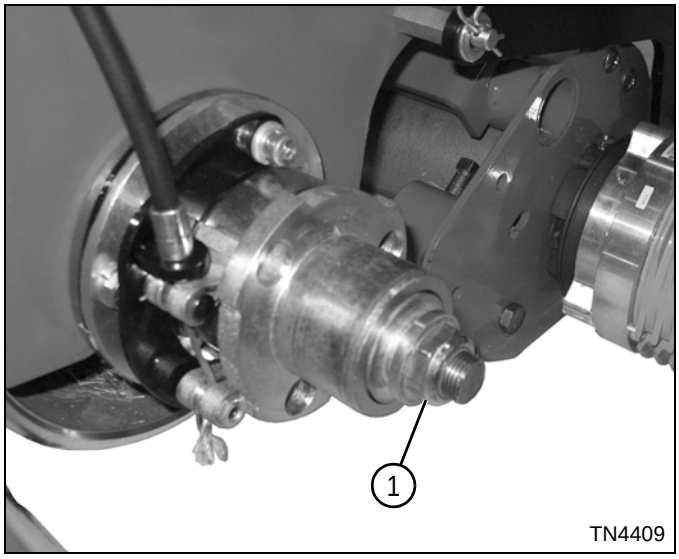

Figure 9-4

3. Remove lock nut (1) from the transport roller shaft.

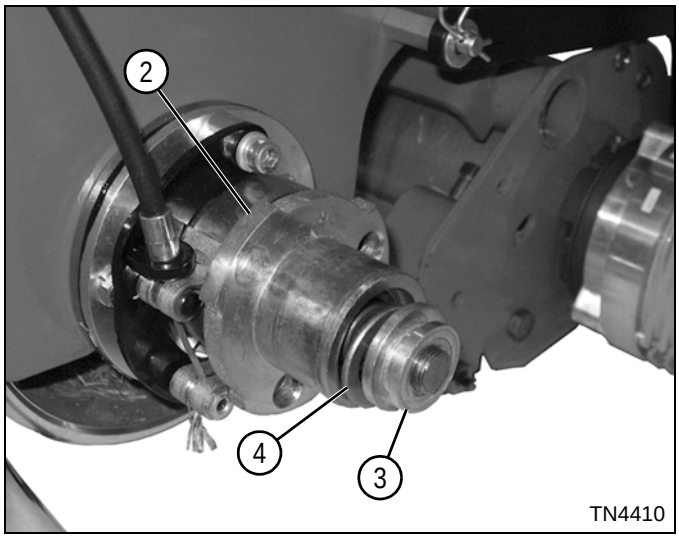

Figure 9-5

4. Remove latching collar (3), bushing (4), and hub assembly (2).

Disassembly

See Figure 9-6.

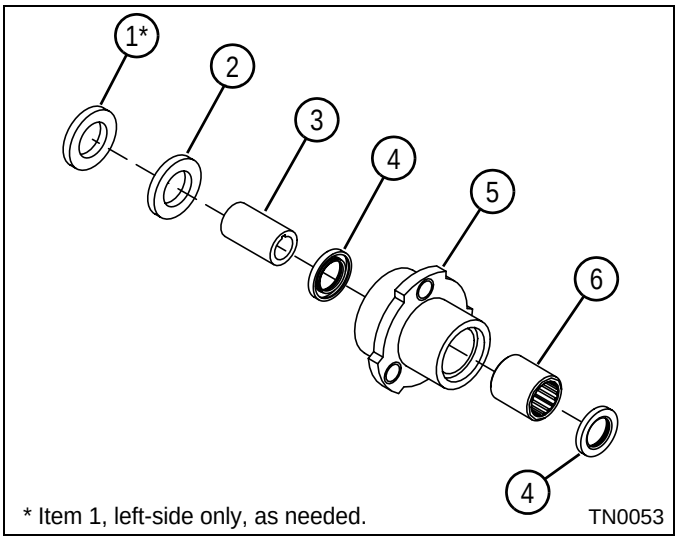

Figure 9-6

1. Remove washer (1), bushing (2), and clutch sleeve (3) from hub (5).
2. Remove seals (4) and bearing (6).

Assembly

See Figures 9-7 and 9-8.

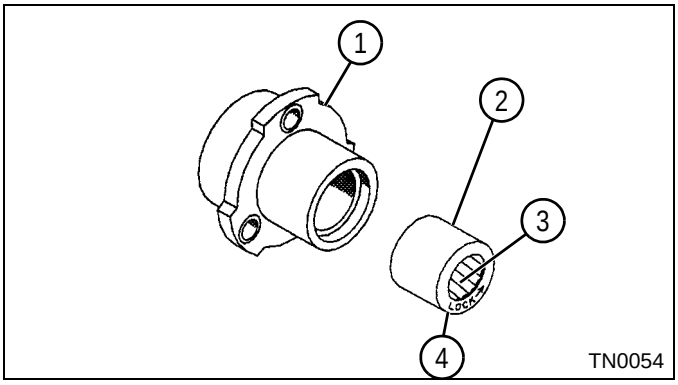

Figure 9-7

1. Apply grease that meets or exceeds NLGI Grade 2 LB specifications to the wheel bearing rollers (3).

NOTE

The bearing used in the wheel hub is directional and must be installed in the correct direction of rotation.

2. Install bearing (2) in the hub (1):

   Right Wheel Hub: Install the bearing with the word "LOCK" and arrow (4) stamped on it facing the OUTSIDE of the hub housing.

   Left Wheel Hub: Install the bearing with the word "LOCK" and arrow (4) stamped on it facing the INSIDE of the hub housing.

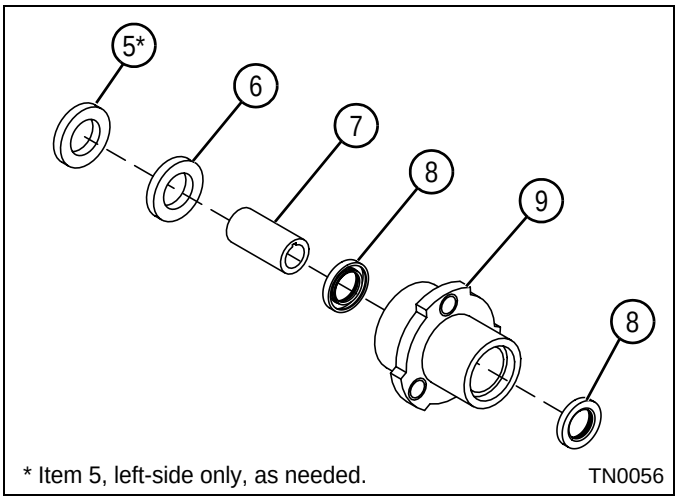

Figure 9-8

NOTE

Always use new seals.

3. Apply a thin film of grease that meets or exceeds NLGI Grade 2 LB specifications to the lips of the seals (8).
4. Using a seal driver, install seals (8) in the wheel hub (9).
5. Install clutch sleeve (7) into seals (8) and bearing (2).
6. Install bushing (6) and washer (5) over the clutch sleeve (7).

Installation

See Figures 9-9 through 9-11.

Required Materials
Anti-Seize Compound

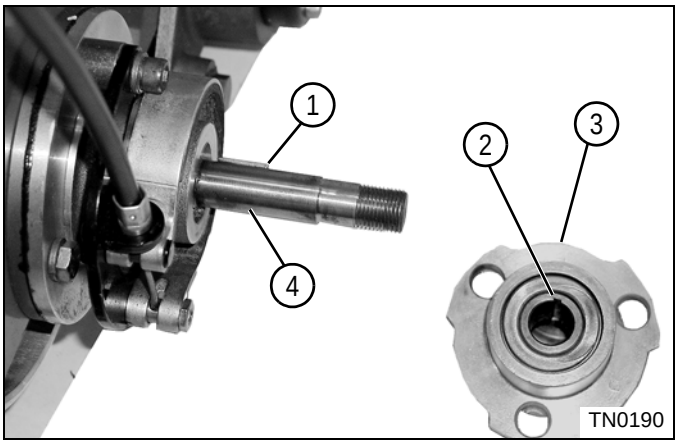

Figure 9-9

1. Apply anti-seize compound to keyway (1).
2. Align the groove (2) in the hub (3) with the keyway (1) in the transport roller shaft (4), and install the hub assembly on the shaft.

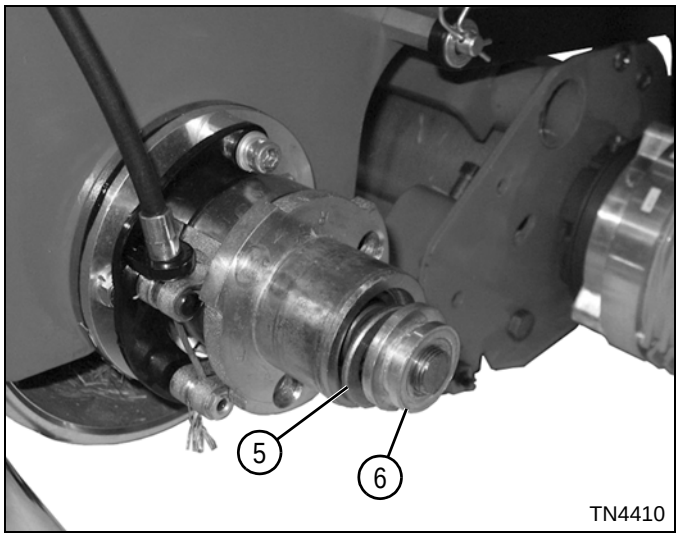

Figure 9-10

3. Install bushing (5) and latching collar (6).

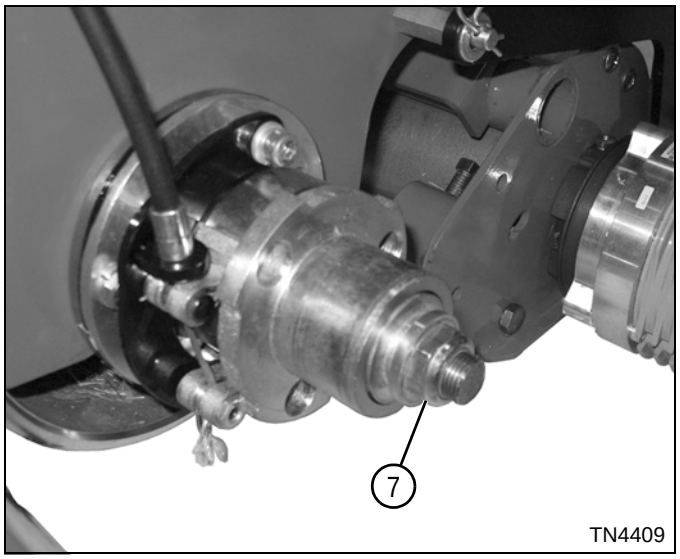

Figure 9-11

4. Install a new lock nut (7) on the transport roller shaft. Tighten lock nut (7) until all end play is removed, then back off nut just enough to ensure latching collar (6) rotates freely.
5. Install the transport wheels (if equipped). (See “Transport Wheels (Optional)” on page 9-2.)

Kickstand Assembly

Removal and Installation

See Figures 9-12 and 9-13.

1. Park the mower safely. (See “Park Mower Safely” on page 1-5.)
2. Retract the kickstand and allow the mower to rest on the traction roller or transport wheels.

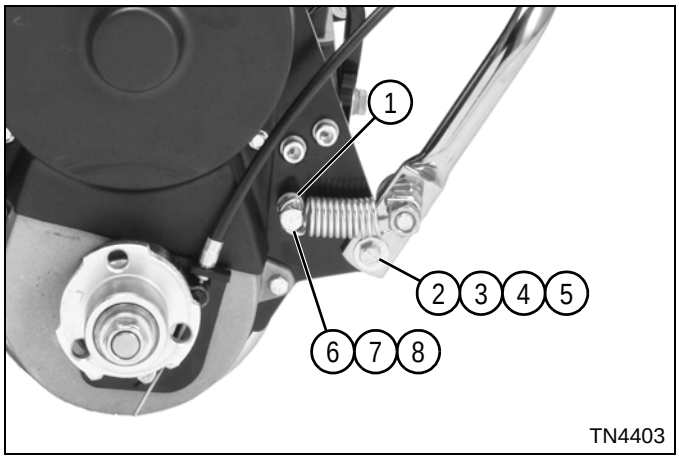

Figure 9-12: Left Side

3. Remove screw (6), jam nut (7), and lock washer (8).
4. Disengage spring (1).
5. Remove screw (2), two flat washers (3), spacer (4), and lock nut (5).

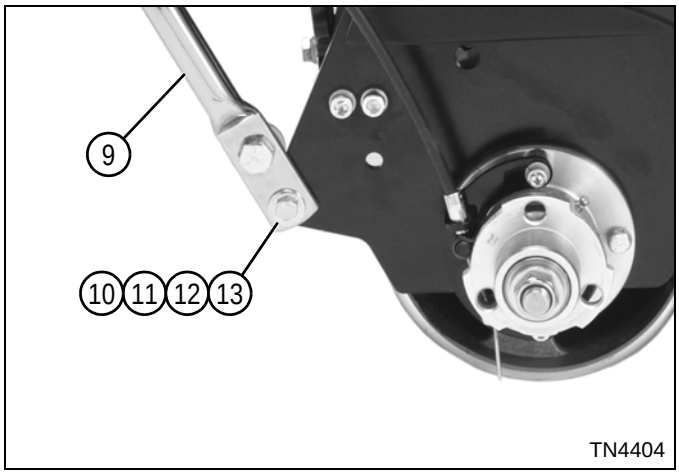

Figure 9-13: Right Side

6. Remove screw (10), two flat washers (11), spacer (12), and lock nut (13).
7. Remove kickstand assembly (9).

Installation Notes

- *Install kickstand assembly by reversing the order of removal.*
- *Tighten screw and nut (10 and 13) during installation just enough to enable kickstand to spring up with minimal assistance.*

Chapter 10

Accessories

Specifications **10-2**
Check and Adjustment Specifications 10-2
Repair Specifications 10-2
Checks and Adjustments **10-3**
Turf Groomer 10-3
Repair **10-8**
Light Kit Assembly 10-8
Cutting Unit Front Roller 10-8
Scraper Blade Assembly 10-16
Push Brush Assembly 10-17
Turf Groomer 10-19
Turf Groomer—Drive and Driven Assemblies 10-23
Turf Groomer—Groomer Blade Assembly 10-24
Turf Groomer—Roller Assembly 10-25

10

JACOBSEN
A Textron Company

Specifications

Check and Adjustment Specifications

Specification		
Turf Groomer Eccentric Mounting Screw Torque	lb-ft (N·m)	8–10 (10.8–13.6)
Turf Groomer Belt Tension Link Mounting Screw Torque	lb-ft (N·m)	20 (27.1)

Repair Specifications

Specification		
Solid Front Roller Assembly Maximum Rotational Resistance	lb-in. (N·m)	6 (0.68) Maximum with No End Play
Solid Tube Front Roller Lock Nut Torque	lb-ft (N·m)	10–30 (13.5–40.6)
Solid Tube Front Roller Shaft-to-Bearing Rotational Resistance	lb-in. (N·m)	0–1 (0–0.11) with No End Play
Solid Tube Front Roller Assembly Maximum Rotational Resistance	lb-in. (N·m)	6 (0.68) Maximum with No End Play
Grooved Front Roller Lock Nut Torque	lb-ft (N·m)	10–30 (13.5–40.6)
Grooved Front Roller Shaft-to-Bearing Rotational Resistance	lb-in. (N·m)	0–1 (0–0.11) with No End Play
Grooved Front Roller Assembly Rotational Resistance	lb-in. (N·m)	6 (0.68) Maximum with No End Play
Grooved Disc Roller Assembly Maximum Rotational Resistance	lb-in. (N·m)	6 (0.68) Maximum with No End Play
Grooved Segmented Front Roller Jam Nut Torque	lb-ft (N·m)	70 (95)
Grooved Segmented Front Roller Assembly Rotational Resistance	lb-in. (N·m)	6 (0.68) Maximum with No End Play
Push Broom Assembly Rod-To-Cam Gap	in. (mm)	0.25 (6.3)

Checks and Adjustments

Turf Groomer

Raising the Groomer

See Figure 10-1.

1. Park the mower safely. (See “Park Mower Safely” on page 1-5.)

NOTE

The groomer is designed to be always on whenever the reel is turning.

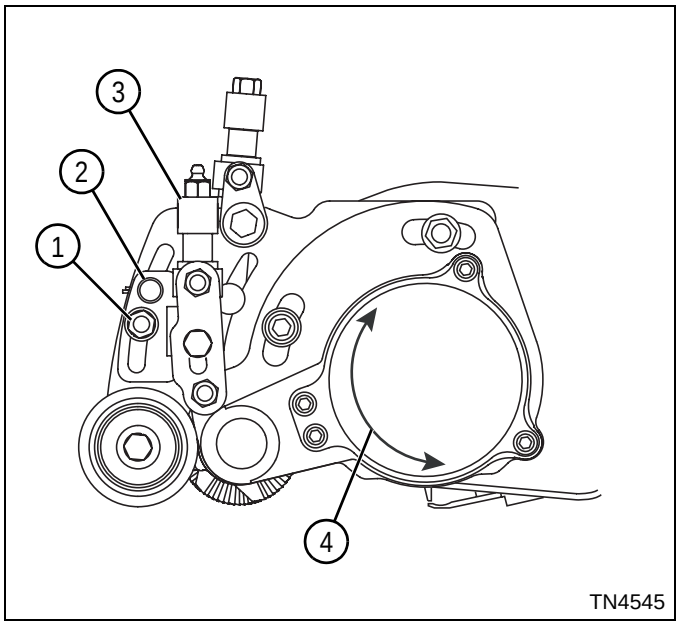

Figure 10-1

CAUTION

Do not adjust groomer height by loosening screw (1) and pivoting groomer assembly (4). Only use the groomer height knobs (3). (See “Height-of-Cut Adjustment” on page 10-4.)

2. To raise groomer, loosen screw (1) on both ends of the reel and pivot the groomer up. Tighten screw (1).
3. To lower groomer to operation position, loosen screw (1) and fully pivot groomer down until pin (2) is at bottom of slot. Tighten screw (1).

Height-of-Cut Adjustment

See Figure 10-2.

Required Tools
Height-of-Cut Gauge Bar (Jacobsen PN 158568)

1. Park the mower safely. (See “Park Mower Safely” on page 1-5.)

NOTES

- *This procedure is only for mowers equipped with a turf groomer. For adjusting the height-of cut for mowers not equipped with a turf groomer, see “Height-of-Cut Adjustment (HOC)” on page 8-17.*
- *Prior to adjusting the reel and groomer heights-of-cut, check the bedknife-to-reel gap for the cutting unit and adjust as necessary. (See “Bedknife-to-Reel Adjustment” on page 8-14.).*

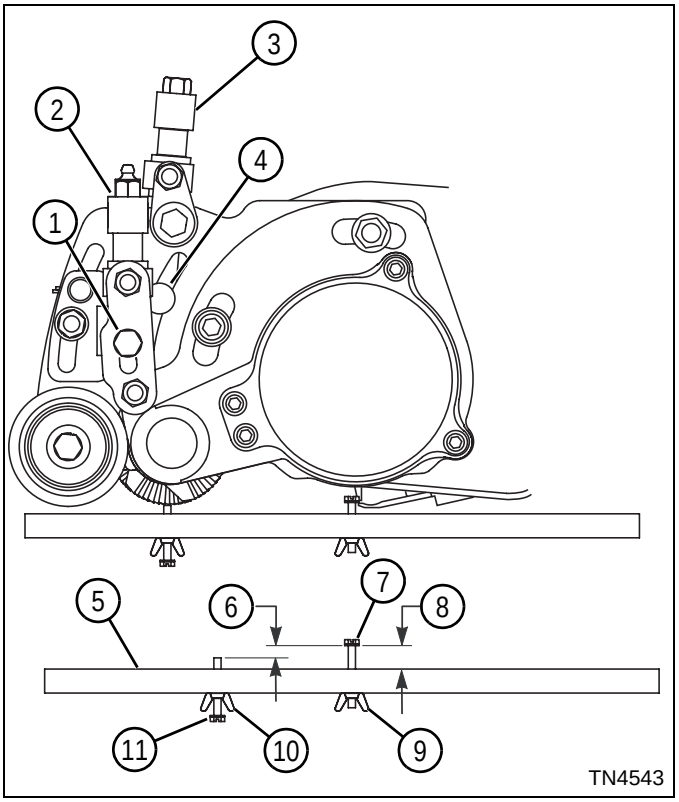

Figure 10-2

2. Loosen wing nut (9) and turn screw (7) in or out to obtain the desired reel height-of-cut (8) on gauge bar (5). When dimension (8) is obtained, tighten wing nut (9).

CAUTION

Do not set the turf groomer blades at ground level or below. Mowing at this level may damage the machine as well as the turf. The Turf Groomer is designed to allow maximum groomer depth of one-half height of cut and is to be used as a conditioner not a vertical mower.

3. Loosen wing nut (10) and turn screw (11) in or out to obtain the desired turf groomer cutting depth (6). The turf groomer cutting depth should not be set more than 50% below the height-of-cut.
4. Loosen screw (4) on each side of reel just enough to allow inside knobs (3) to raise or lower the roller.
5. Place gauge bar (5) across the front and rear rollers at one end of the reel.
6. Slide the head of screw (7) over the bedknife and adjust knob (3) to close the gap between the head of screw (7) and bedknife.
7. Repeat steps 5 and 6 for the other end of the reel.
8. Check both ends of reel for proper adjustment and tighten screw (4) on each side of reel.
9. Loosen screw (1) just enough to allow outside knobs (2) to raise or lower the groomer.
10. Place gauge bar (5) across the front and rear rollers at one end of the reel with the head of screw (7) over the bedknife.
11. Adjust knob (2) to close the gap between the end of screw (11) and groomer blades.
12. Repeat steps 10 and 11 at the other end of the reel.
13. Check that turf groomer is adjusted evenly on both ends and tighten screw (1) at each end of reel.

Bearing Adjustment

See Figure 10-3.

1. Park the mower safely. (See “Park Mower Safely” on page 1-5.)

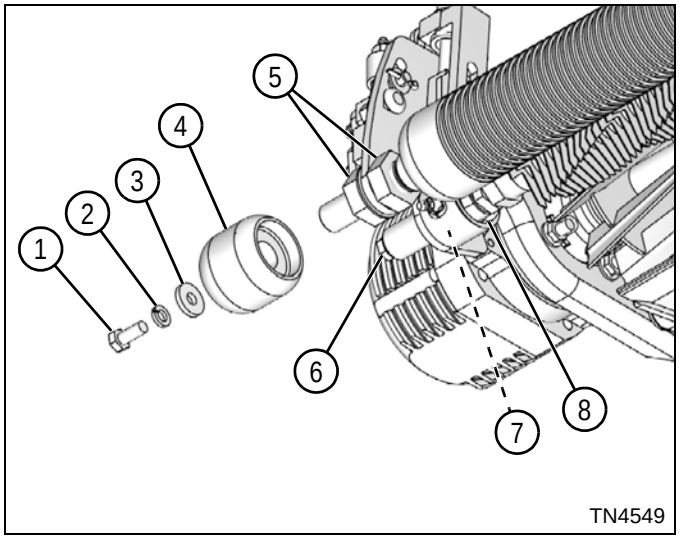

Figure 10-3

2. Remove screw (1), lock washer (2), flat washer (3), and guide wheel (4) from the motor side of the cutting unit.
3. Loosen turf groomer lock nut (8), shaft screw (6), and front roller lock nuts (5) on the motor side of the cutting unit.

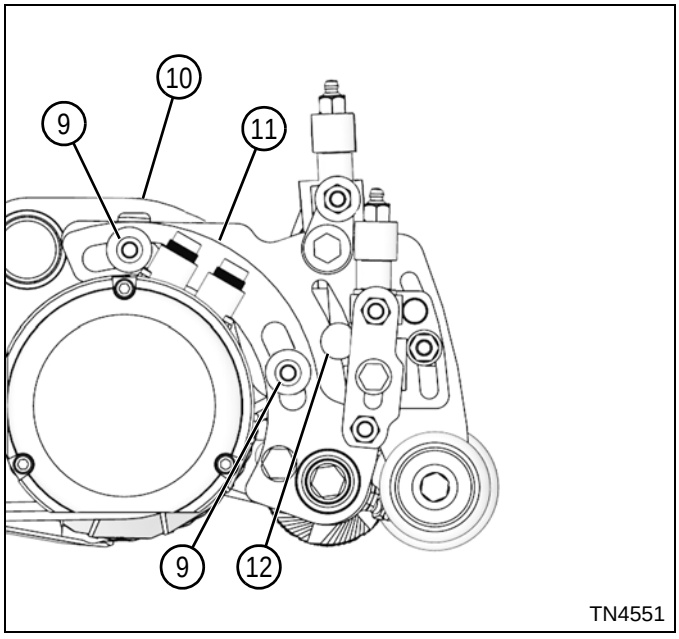

Figure 10-4

4. Tighten turf groomer bracket screws (9) and carriage bolt (12) on both sides of the cutting unit to close the gap between the turf groomer brackets (11) and frame (10). The turf groomer brackets should be parallel tot he frame and allowed to pivot freely.
5. Adjust turf groomer lock nut (8) to make contact with spacer (7). Tighten shaft screw (6).
6. Align the turf groomer blades to the roller discs. (See “Blade-to-Roller Alignment” on page 10-7.)
7. Adjust turf groomer belt. (See “Belt Adjustment” on page 10-6.)

Belt Adjustment

See Figures 10-5 and 10-6.

1. Park the mower safely. (See “Park Mower Safely” on page 1-5.)

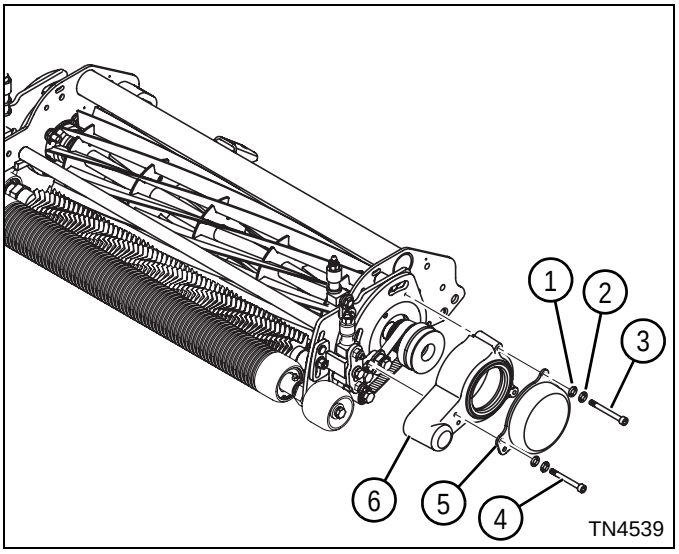

Figure 10-5

2. Remove two screws (3), two screws (4), four lock washers (2), four flat washers (1), and remove pulley cover (5) and groomer cover (6).

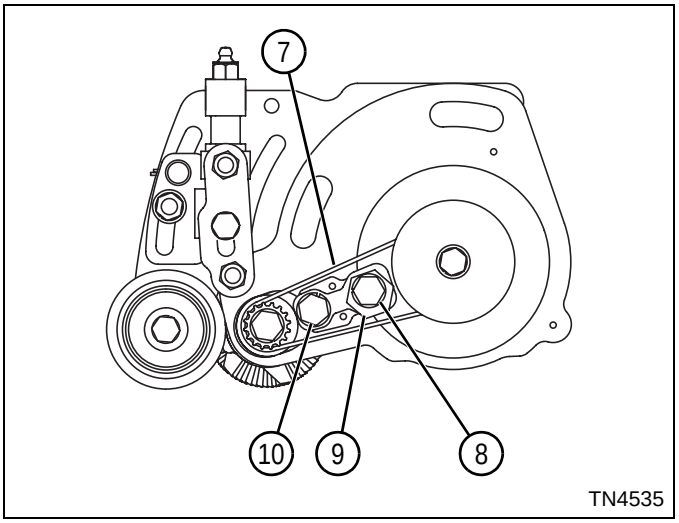

Figure 10-6

3. Loosen eccentric mounting screw (8) and belt tension link mounting screw (10).
4. Using a socket, turn eccentric (9) by hand until belt (7) is tight.
5. Tighten eccentric mounting screw (8) to 8–10 lb-ft (10.8–13.6 N·m).
6. Tighten belt tension link mounting screw (10) to 20 lb-ft (27.1 N·m).
7. Install groomer cover (6), pulley cover (5), four flat washers (1), four lock washers (2), two screws (4), and two screws (3).

Blade-to-Roller Alignment

See Figures 10-7 and 10-8.

1. Park the mower safely. (See “Park Mower Safely” on page 1-5.)

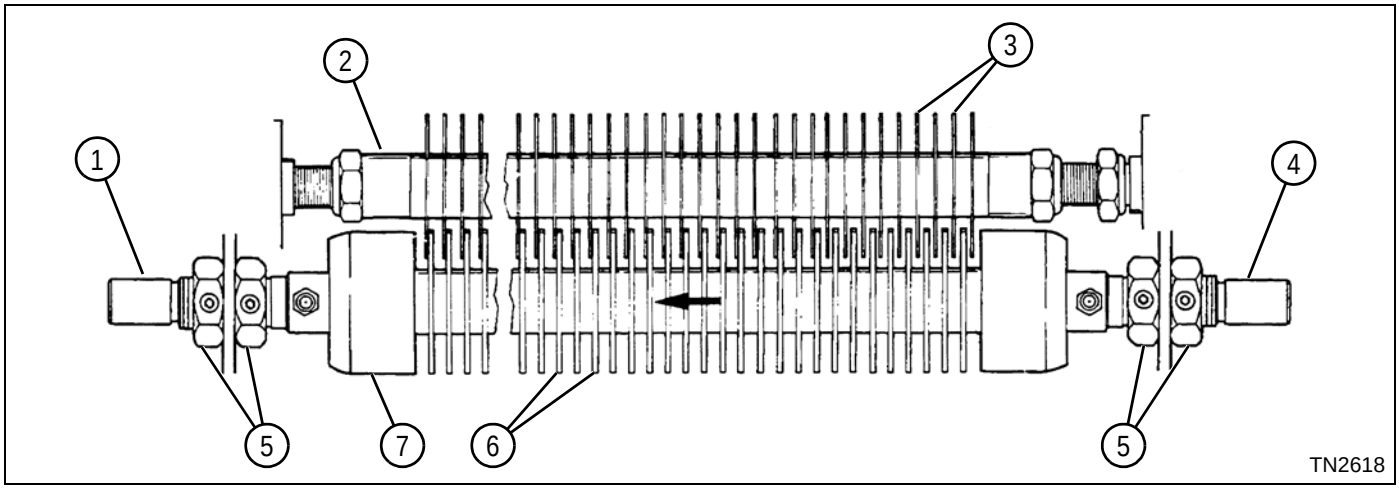

1	Belt Cover End of Cutting Unit	3	Turf Groomer Blades	5	Front Roller Lock Nuts	7	Front Roller
2	Turf Groomer	4	Motor End of Cutting Unit	6	Roller Discs	8	

Figure 10-7

2. Loosen front roller lock nuts (5).
3. Shift the front roller (7) toward the belt cover end of the cutting unit (1) until the turf groomer blades (3) contact the roller discs (6). For any blades that have a gap, install shims to move the blades to make contact.

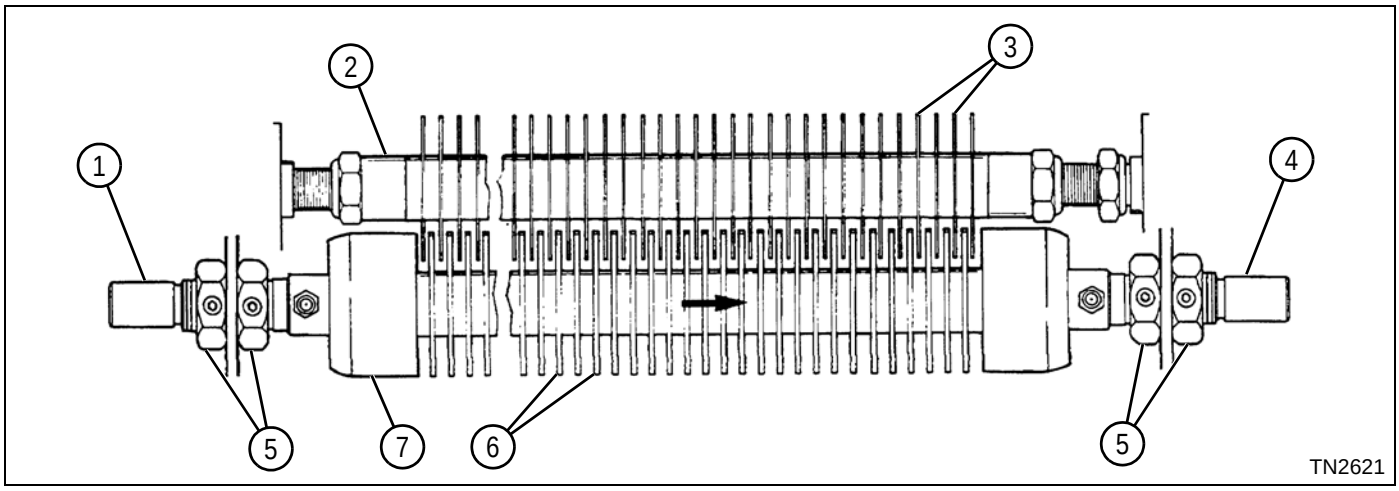

1	Belt Cover End of Cutting Unit	3	Turf Groomer Blades	5	Front Roller Lock Nuts	7	Front Roller
2	Turf Groomer	4	Motor End of Cutting Unit	6	Front Roller Discs	8	

Figure 10-8

4. Ensure all blades make contact, then shift the front roller (7) until the turf groomer blades (3) are centered within the grooves of the roller discs (6).
5. Tighten front roller lock nuts (5).

Repair

Light Kit Assembly

Removal and Installation

See Figure 10-9.

Required Materials
Dielectric Grease (Jacobsen PN 365422)

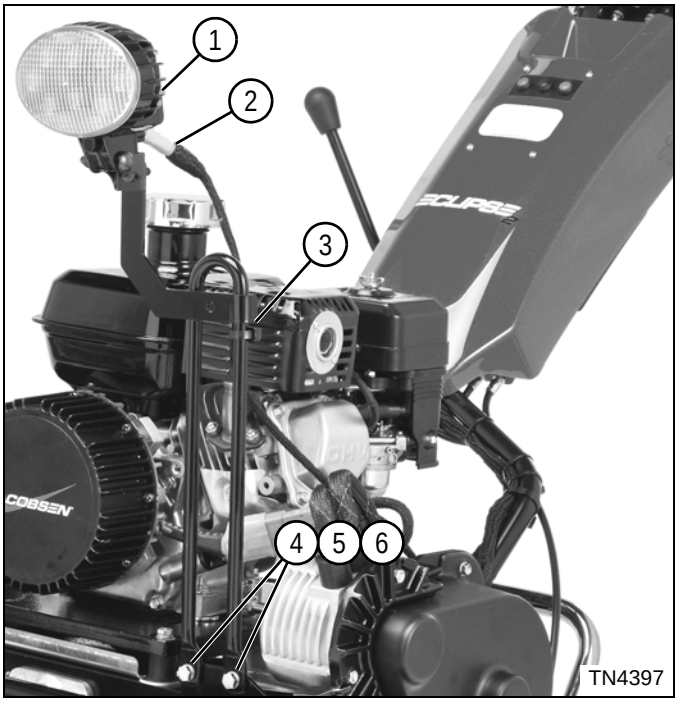

Figure 10-9

1. Park the mower safely. (See “Park Mower Safely” on page 1-5.)
2. Cut cable tie (3).

NOTE

Label all wires before disconnecting to ensure correct installation.

3. Disconnect work light harness connector (2).
4. Remove two nuts (4), lock washers (5), screws (6), and work light bracket assembly (1).

Installation Notes

- *Install work light assembly by reversing the order of removal.*
- *Apply dielectric grease (Jacobsen PN 365422) to any connectors removed.*
- *Use new cable tie to secure wire harness.*

Cutting Unit Front Roller

Removal

See Figure 10-10.

1. Park the mower safely. (See “Park Mower Safely” on page 1-5.)

NOTICE

Gen-Set Models: Before tipping mower back for service, the fuel lever must be moved to the OFF position to prevent fuel from leaking into the crankcase. Do not leave the mower tipped back for an extended length of time or oil may migrate into the combustion chamber.

2. Tip mower back on traction drum or tires. Support the mower to prevent it from tipping.

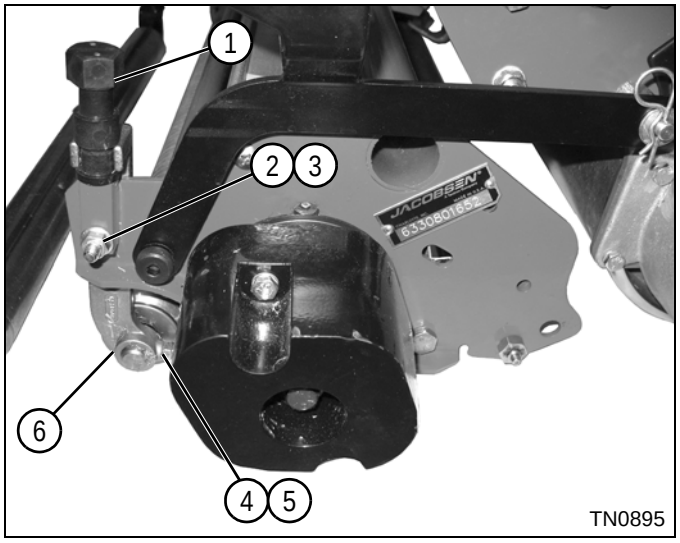

Figure 10-10

3. Remove nuts (2) and screws (3) from both sides of the mower.
4. Remove adjuster knobs (1) from both sides of the mower.
5. Remove the cutting unit front roller assembly (6).
6. Loosen jam nuts (4) and screws (5) on each side of the mower. Remove the roller from height-of-cut brackets.

Disassembly—Solid Rollers

See Figure 10-11.

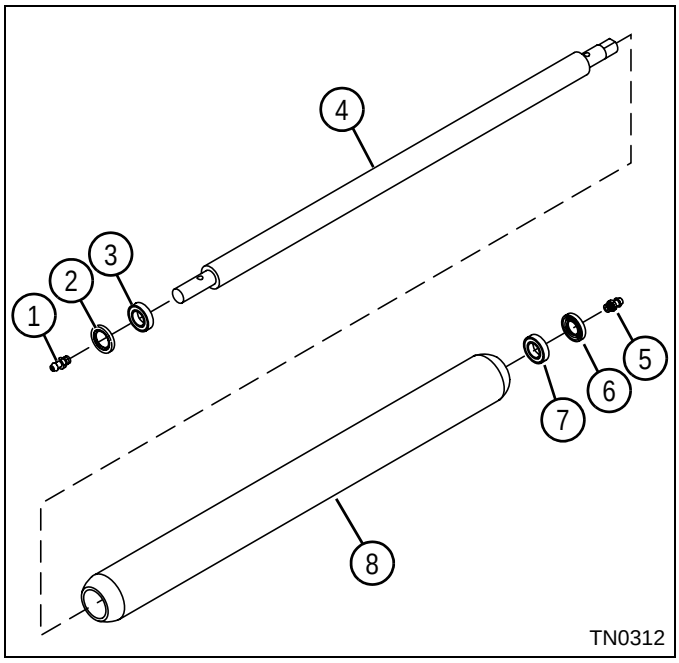

Figure 10-11

1. Remove grease fittings (1 and 5) from the roller shaft (4).
2. Support one end of the roller (8), allowing enough free space for the seal (6) and bearing (7) to exit the roller (8).
3. Apply pressure to the other end of the roller shaft (4) until the seal (6) and bearing (7) are clear of the roller (8).
4. Repeat steps 2 and 3 to remove the seal (2) and bearing (3) from the other end of the roller (8).

Assembly—Solid Rollers

See Figures 10-12 through 10-16.

Required Materials
Permatex® Anaerobic Sealer (or equivalent)

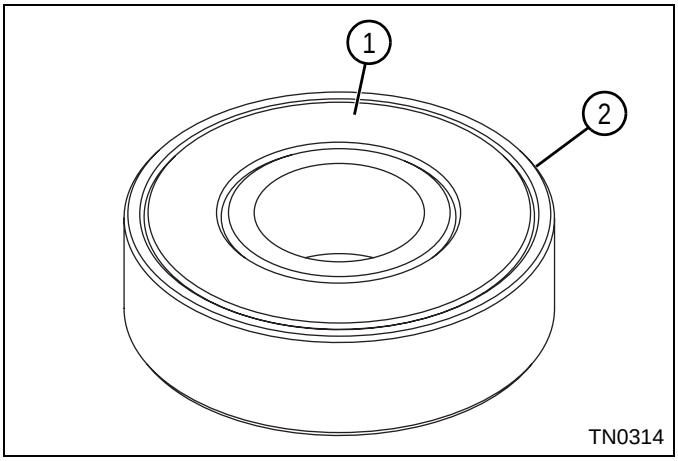

Figure 10-12

1. Remove the shield (1) from one side of each new bearing (2).

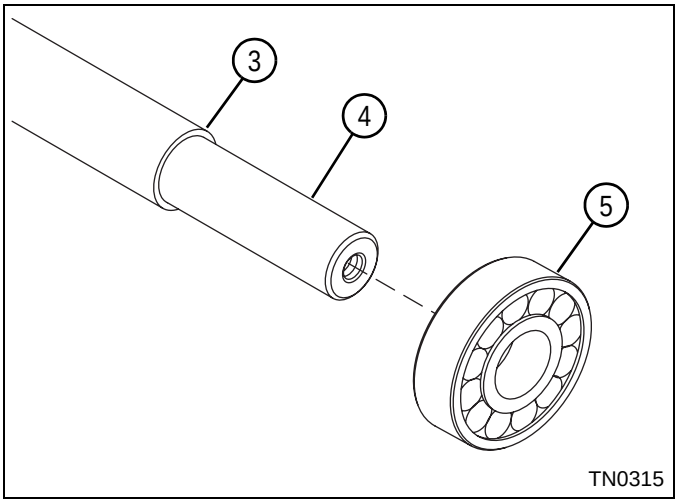

Figure 10-13

2. Pack the bearing (5) with grease that meets or exceeds NLGI Grade 2 LB specifications before installation.
3. Install one bearing (5) on the roller shaft (4) with the shielded side toward the step (3) on the shaft. Press the bearing on the shaft until it rests against the step.

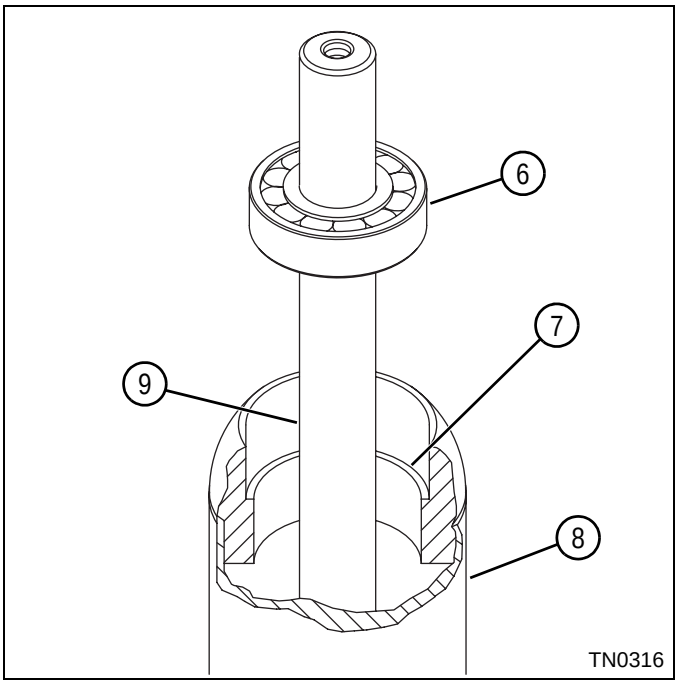

Figure 10-14

4. Install the roller shaft (9) with bearing (6) into the roller (8) until the bearing is seated against the shoulder (7) in the roller.

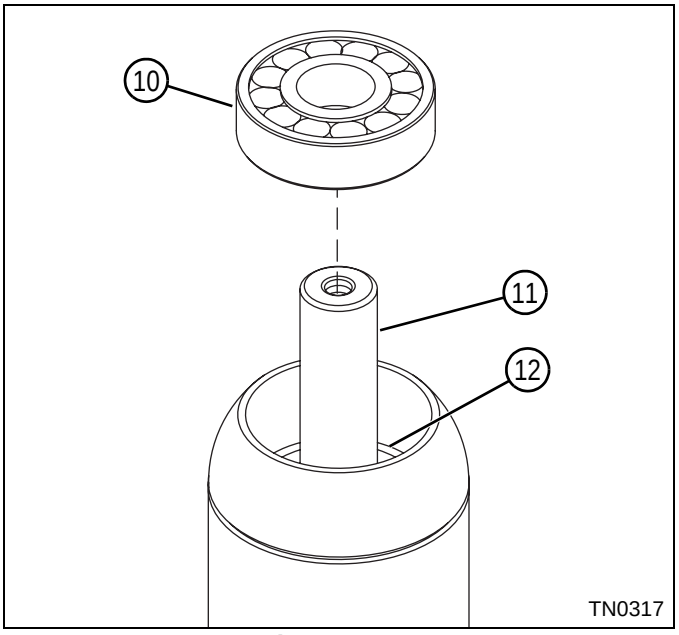

Figure 10-15

5. Pack the bearing (10) with grease that meets or exceeds NLGI Grade 2 LB specifications before installation.
6. Install bearing (10) over the other end of the roller shaft (11), with the sealed side toward the inside of the roller. Seat the bearing against the shoulder (12).

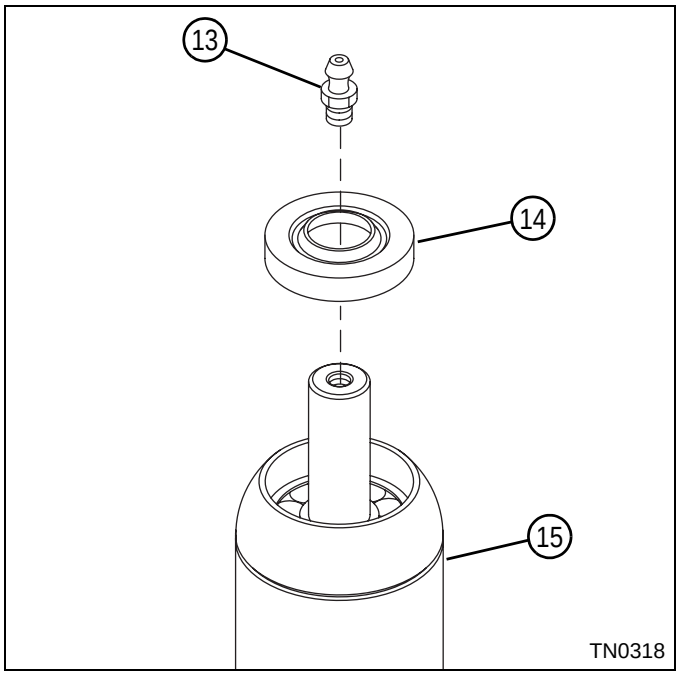

Figure 10-16

NOTE

Always use new grease seals for installation.

7. Apply a thin film of Permatex® Anaerobic Sealant (or equivalent) to the outside diameter of the new grease seal (14). Install the grease seals into each end of the roller (15).
8. Install the grease fittings (13) into each end of the roller shaft and lubricate grease fittings with grease that meets or exceeds NLGI Grade 2 LB specifications. Clean grease fittings before lubricating and apply grease to the fittings with a hand grease gun only. Pump the gun slowly until a slight amount of pressure is felt, then stop—do not over-grease. Do not use compressed air gun.
9. Check the rotational resistance of the roller assembly after four revolutions. The resistance should be 6 lb-in. (0.68 N·m) maximum with no end play.

Disassembly—Solid Tube and Grooved Rollers

See Figure 10-17.

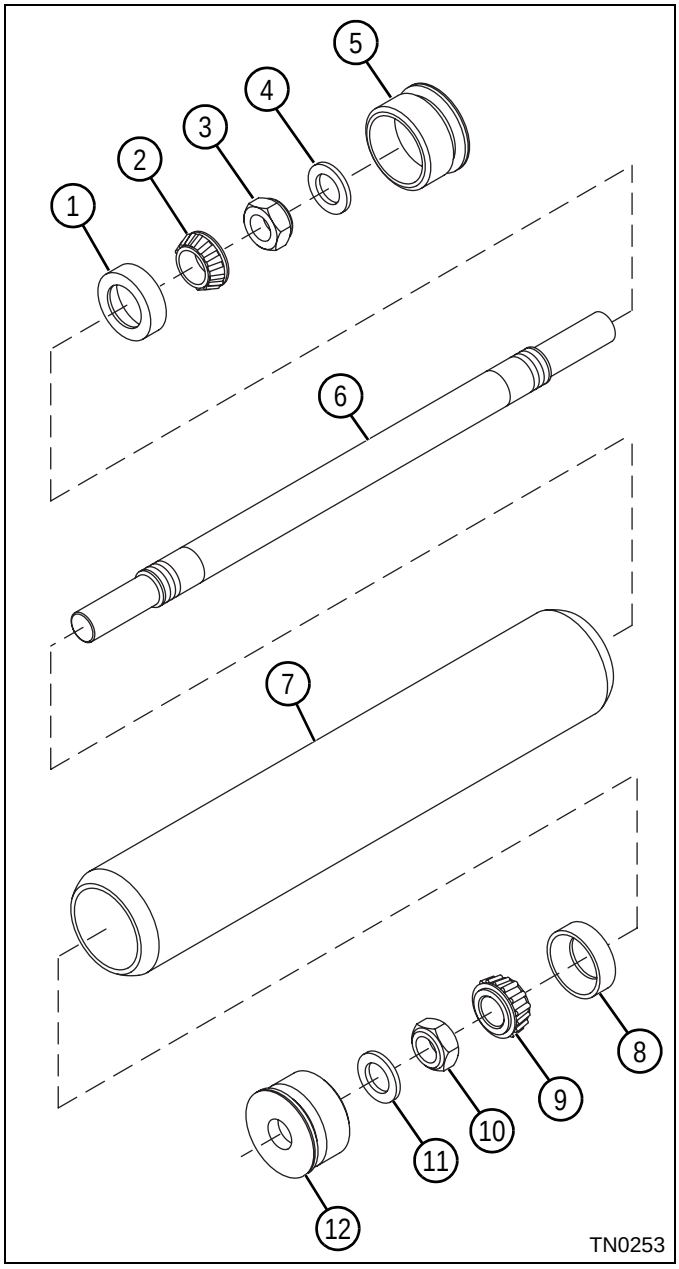

Figure 10-17

NOTE

Solid tube roller shown; grooved roller is similar.

1. Using a puller, remove the adapter seals (5 and 12) from both ends of the roller assembly.
2. Remove lock nuts (3 and 10) and bearings (2 and 9) from both ends of the roller assembly.
3. Remove the roller shaft (6).
4. Inspect the bearings (2 and 9). If replacement is required, use a blind hole bearing puller to remove the bearing cups (1 and 8) from both ends of the roller (7).
5. Remove grease seals (4 and 11) from the adapter seals (5 and 12).

Assembly—Solid Tube and Grooved Rollers

See Figure 10-18.

Required Materials
Permatex® Anaerobic Sealer (or equivalent)

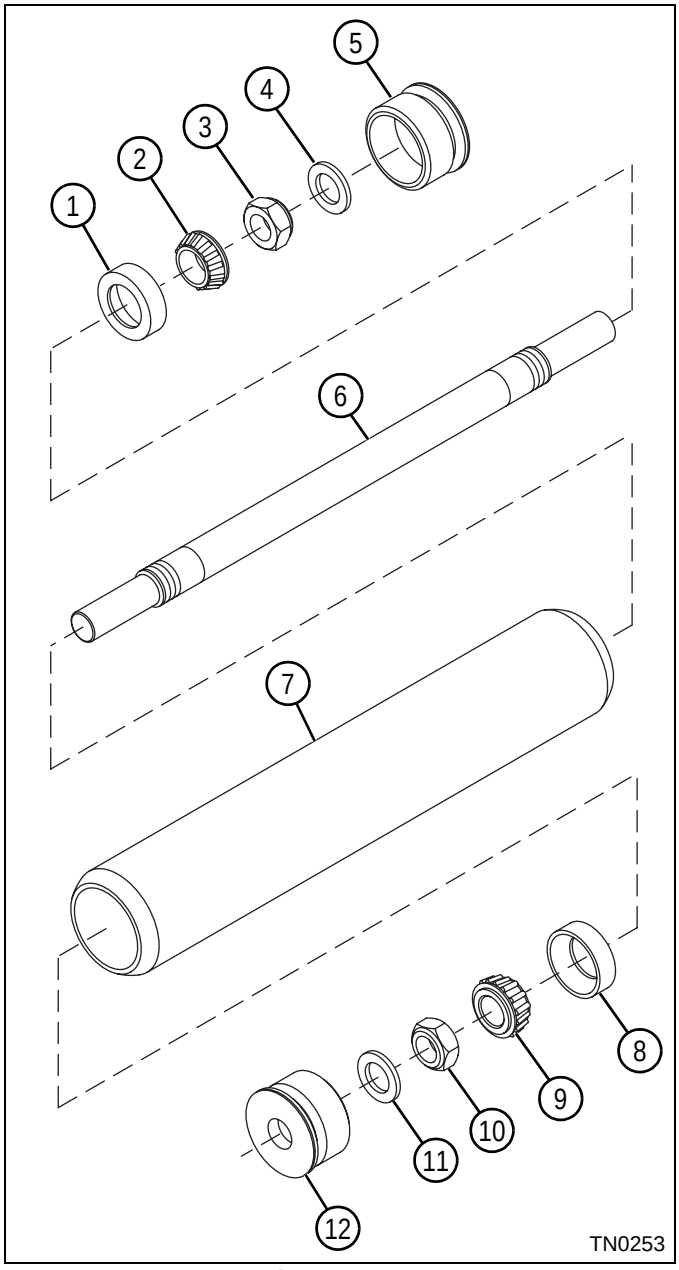

Figure 10-18

NOTE

Always use new grease seals for installation.

1. Apply a thin film of Permatex® Anaerobic Sealant (or equivalent) to the outside diameter of the new grease seals (4 and 11), and install the grease seals in the adapter seals (5 and 12).

NOTE

Bearings and bearing cups should always be replaced as a set.

2. If removed, press new bearing cups (1 and 8) in the roller (7).
3. Pack the bearings (2 and 9) with grease that meets or exceeds NLGI Grade 2 LB specifications before installation.
4. Install the roller (7) and bearings (2 and 9) on the roller shaft (6). Center the roller on the shaft, and install lock nuts (3 and 10). Tighten lock nuts to 10–30 lb-ft (13.5–40.6 N·m) to seat the bearings.
5. Check the rotational resistance of the roller on the shaft. The resistance should be 0–1 lb-in. (0–0.11 N·m) with no end play. Adjust the lock nuts as needed.
6. Apply a thin film of Permatex® Anaerobic Sealant (or equivalent) to the outside diameter of the adapter seals (5 and 12). Install (press) the adapter seals (5 and 12) in the roller (7).
7. Check the rotational resistance of the roller assembly after four revolutions. The resistance should be 6 lb-in. (0.68 N·m) maximum with no end play.

Disassembly—Grooved Disc Roller

See Figure 10-19.

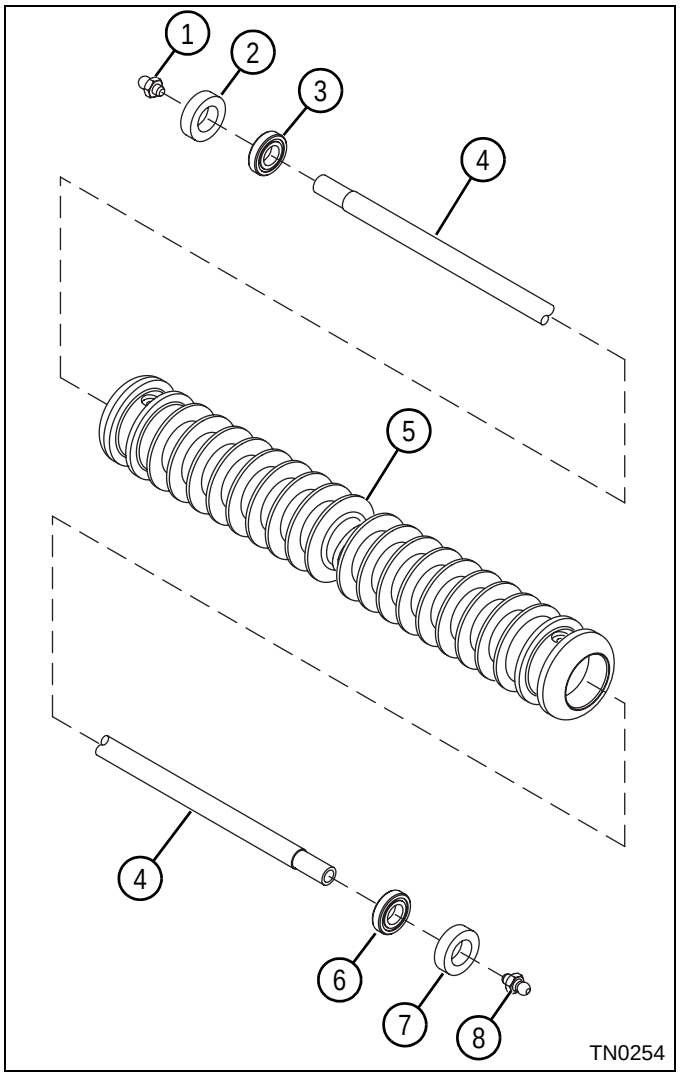

Figure 10-19

1. Remove grease fittings (1 and 8) from the roller shaft (4).
2. Support one end of the roller (5), allowing enough free space for the seal (2) and bearing (3) to exit the roller (5).
3. Apply pressure to the other end of the roller shaft (4) until the seal (2) and bearing (3) are clear of the roller (5).
4. Repeat steps 2 and 3 to remove the seal (7) and bearing (6) from the other end of the roller (5).

Assembly—Grooved Disc Roller

See Figure 10-20.

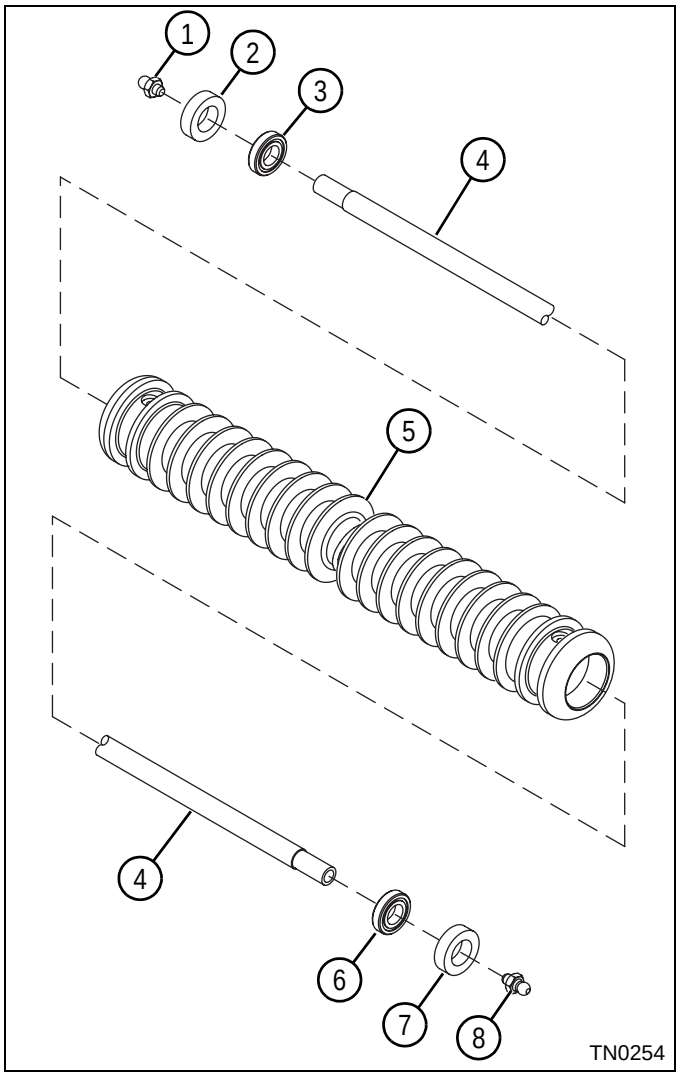

Figure 10-20

1. Install bearing (3) into the roller (5).
2. Install the roller shaft (4) into the roller (5) and bearing (3).
3. Install bearing (6) into the roller (5).

NOTE

Always use new grease seals for installation.

4. Install new grease seals (2 and 7) in the roller (5).
5. Install both grease fittings (1 and 8) in the roller shaft (4).
6. Apply grease that meets or exceeds NLGI Grade 2 LB specifications to both grease fittings (1 and 8). Clean grease fittings before lubricating and apply grease to the fittings with a hand grease gun only. Pump the gun slowly until a slight amount of pressure is felt, then stop—do not over-grease. Do not use compressed air gun.
7. Check the rotational resistance of the roller assembly after four revolutions. The resistance should be 6 lb-in. (0.68 N·m) maximum with no end play.

Disassembly—Grooved Segmented Roller

See Figures 10-21 and 10-22.

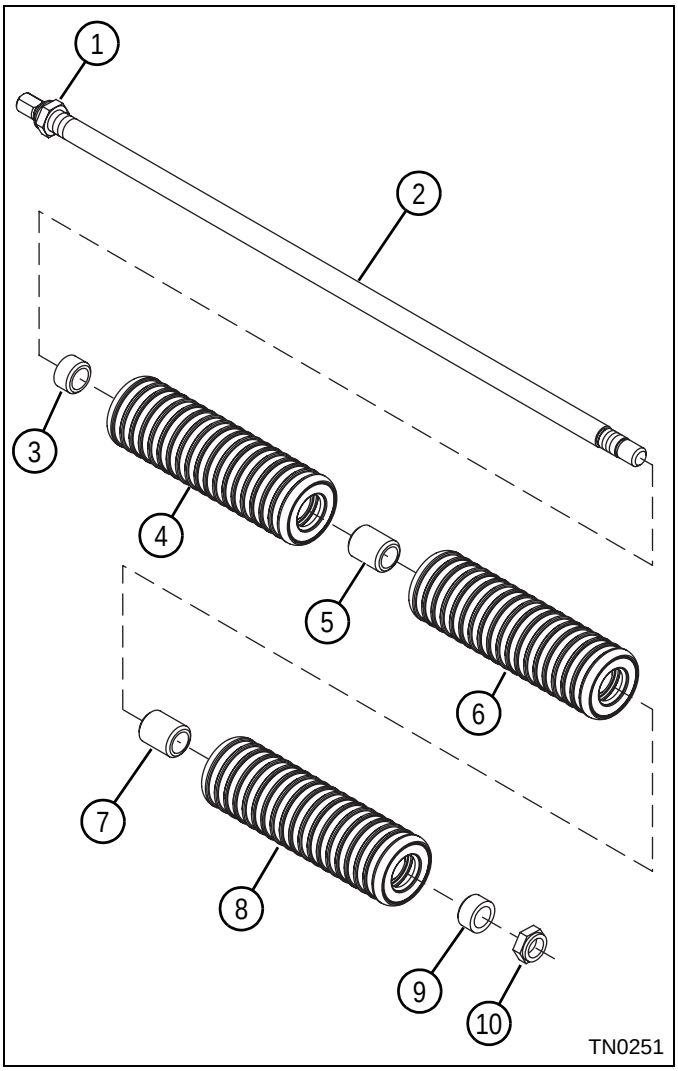

Figure 10-21

1. Remove hex-jam, nylon-insert nut (10) from the roller shaft (2) while holding the nut (1) at the other end of the shaft.
2. Remove short spacer (9) and roller segment assembly (8).
3. Remove long spacers (5 and 7) and roller segment assemblies (4 and 6).

4. Remove short spacer (3) from roller shaft (2).

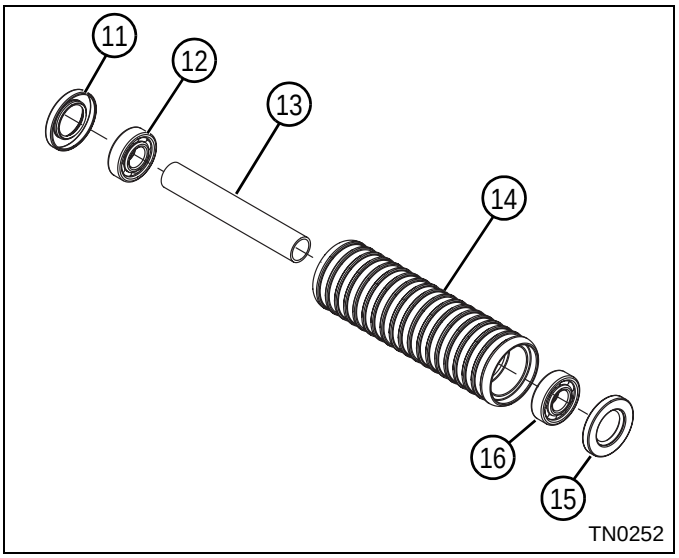

Figure 10-22

NOTE

All three roller segment assemblies are disassembled in the same way.

5. Remove grease seals (11 and 15), ball bearings (12 and 16), and spacer (13) from the roller segment (14).

Assembly—Grooved Segmented Roller

See Figures 10-23 and 10-24.

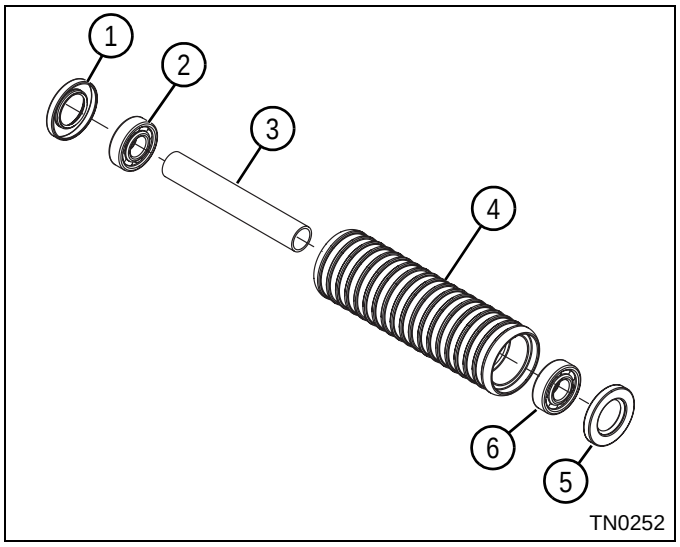

Figure 10-23

NOTES

- *All three roller segment assemblies are assembled in the same way.*
- *Always use new grease seals for installation.*

1. Install a ball bearing (2) and a new grease seal (1) in one end of the roller segment (4).
2. Apply grease that meets or exceeds NLGI Grade 2 LB specifications to the inside of the spacer (3), and install the spacer (3) into the roller segment (4).
3. Install a ball bearing (6) and grease seal (5) in the other end of the roller segment (4).
4. Apply grease that meets or exceeds NLGI Grade 2 LB specifications to the lips of the grease seals (1 and 5).

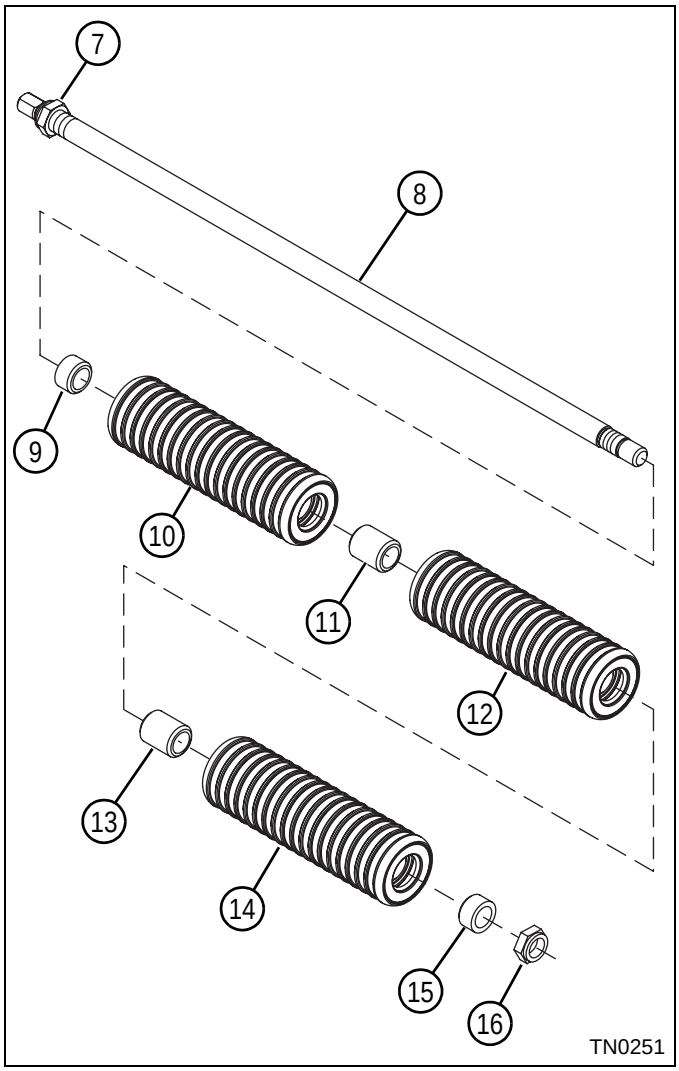

Figure 10-24

5. Apply a thin film of grease that meets or exceeds NLGI Grade 2 LB specifications to the outside diameter of the short spacer (9), and install the spacer on the roller shaft (8) with the bevel facing away from the nut (7).
6. Install the roller segment assemblies (10, 12, and 14) on the roller shaft (8), placing a long spacer (11 and 13) between each of the roller segments.
7. Apply a thin film of grease that meets or exceeds NLGI Grade 2 LB specifications to the inside diameter of the short spacer (15) on the roller shaft (8).
8. Install jam nut (16) on the roller shaft (8).
9. Ensure the distance from the ends of shaft (8) and each nut (7 and 16) remain within 0.060 in. (1.53 mm) of each other and tighten nuts to 70 lb-ft (95 N·m).
10. Check the rotational resistance of the roller assembly after four revolutions. The resistance should be 6 lb-in. (0.68 N·m) maximum with no end play.

Installation

See Figure 10-25.

1. Park the mower safely. (See “Park Mower Safely” on page 1-5.)

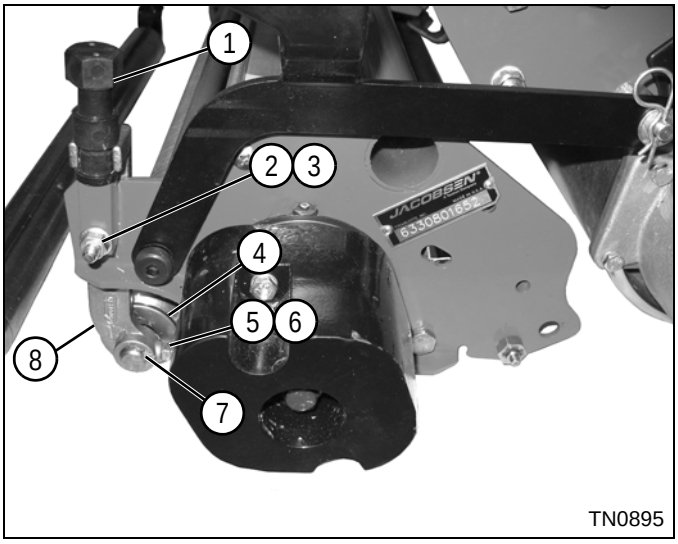

Figure 10-25

2. Install height-of-cut brackets (8) to both ends of front roller (4).
3. Rotate shaft (7) until flat on shaft is aligned with screw (5) and tighten screws (5) and jam nuts (6) on both ends of front roller.
4. Install cutting unit front roller assembly.
5. Install adjuster knobs (1) to both sides of the mower.
6. Install screws (2) and nuts (3) to both sides of the mower.
7. Adjust height-of-cut. (See “Height-of-Cut Adjustment (HOC)” on page 8-17.)

Scraper Blade Assembly

Removal and Installation

See Figure 10-26.

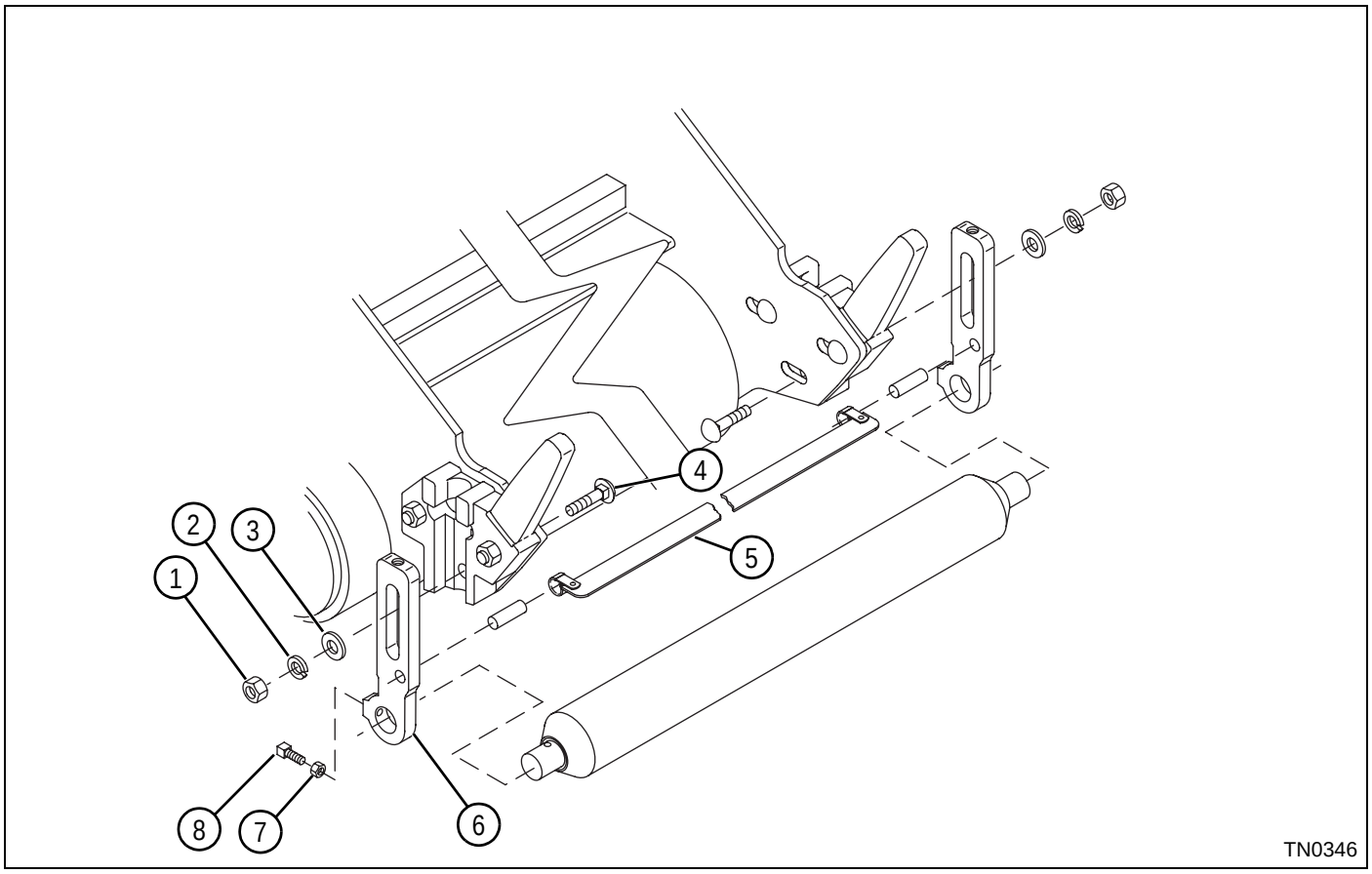

Figure 10-26

1. Park the mower safely. (See “Park Mower Safely” on page 1-5.)
2. Retract the kickstand and allow the mower to rest on the traction roller or transport wheels.
3. Place blocks under the frame to remove weight from the front roller.

NOTE

Only one adjuster bracket must be removed to remove the scraper blade assembly. Bracket on either side can be removed.

4. Loosen jam nut (7) and square-head bolt (8).
5. Remove nut (1), lock washer (2), flat washer (3), and carriage bolt (4) from adjuster bracket (6).
6. Remove adjuster bracket (6).
7. Remove scraper assembly (5).

Installation Notes

- *Install the scraper assembly by reversing the order of removal.*
- *Adjust height-of-cut. (See “Height-of-Cut Adjustment (HOC)” on page 8-17.)*

Push Brush Assembly

Disassembly and Assembly

See Figure 10-27.

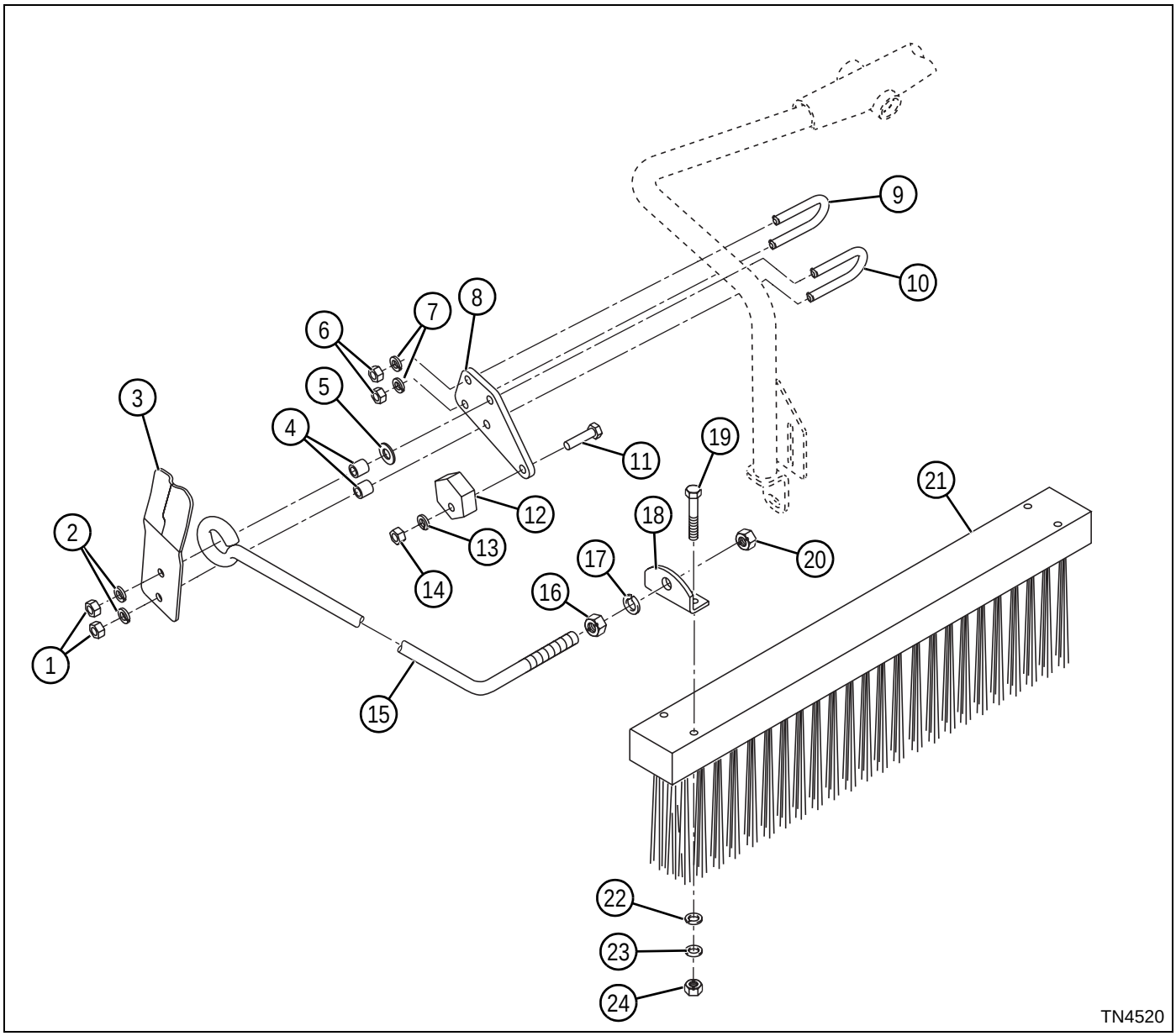

1	Nut (4)	6	Nut (4)	11	Screw (2)	16	Nut (2)	21	Brush
2	Lock Washer (4)	7	Lock Washer (4)	12	Cam (2)	17	Lock Washer (2)	22	Flat Washer (4)
3	Flat Spring (2)	8	Push Brush Mount (2)	13	Lock Washer (2)	18	Mounting Plate (2)	23	Lock Washer (4)
4	Spacer (4)	9	U-Bolt (2)	14	Nut (2)	19	Screw (4)	24	Nut (4)
5	Flat Washer (2)	10	U-Bolt (2)	15	Brush Mounting Rod (2)	20	Nut (2)		

Figure 10-27

1. Park the mower safely. (See “Park Mower Safely” on page 1-5.)
2. Remove transport wheels (if equipped). Retract the kickstand and allow the mower to rest on the traction roller.
3. Remove nut (20) from brush mounting rod (15) on each side of brush (21) and remove brush from mower.
4. Remove lock washer (17) and nut (16) from both brush mounting rods (15).

5. Remove screws (19), flat washers (22), lock washers (23), nuts (24), and brackets (18) from brush.
6. Remove nuts (1), washers (2), flat springs (3), spacers (4), flat washers (5), brush mounting rods (15), and U-bolts (10).
7. Remove screws (11), nuts (14), lock washers (13), and cams (12).
8. Remove nuts (6), lock washers (7), push brush mount (8), and U-bolt (9) from each side of mower.

Assembly Notes

- *Inspect parts for wear or damage and replace as necessary.*
- *Assemble push brush assembly by reversing the order of disassembly.*
- *Use nuts (16) and (20) to center the push brush on the mower.*
- *Adjust the push brush by lowering the push brush to the ground and adjusting cam (12) on each side of mower so there is a gap of approximately 0.25 in. (6.3 mm) between rod (15) and cam (12).*

Turf Groomer

Removal and Installation

See Figures 10-28 and 10-29.

Drive Side

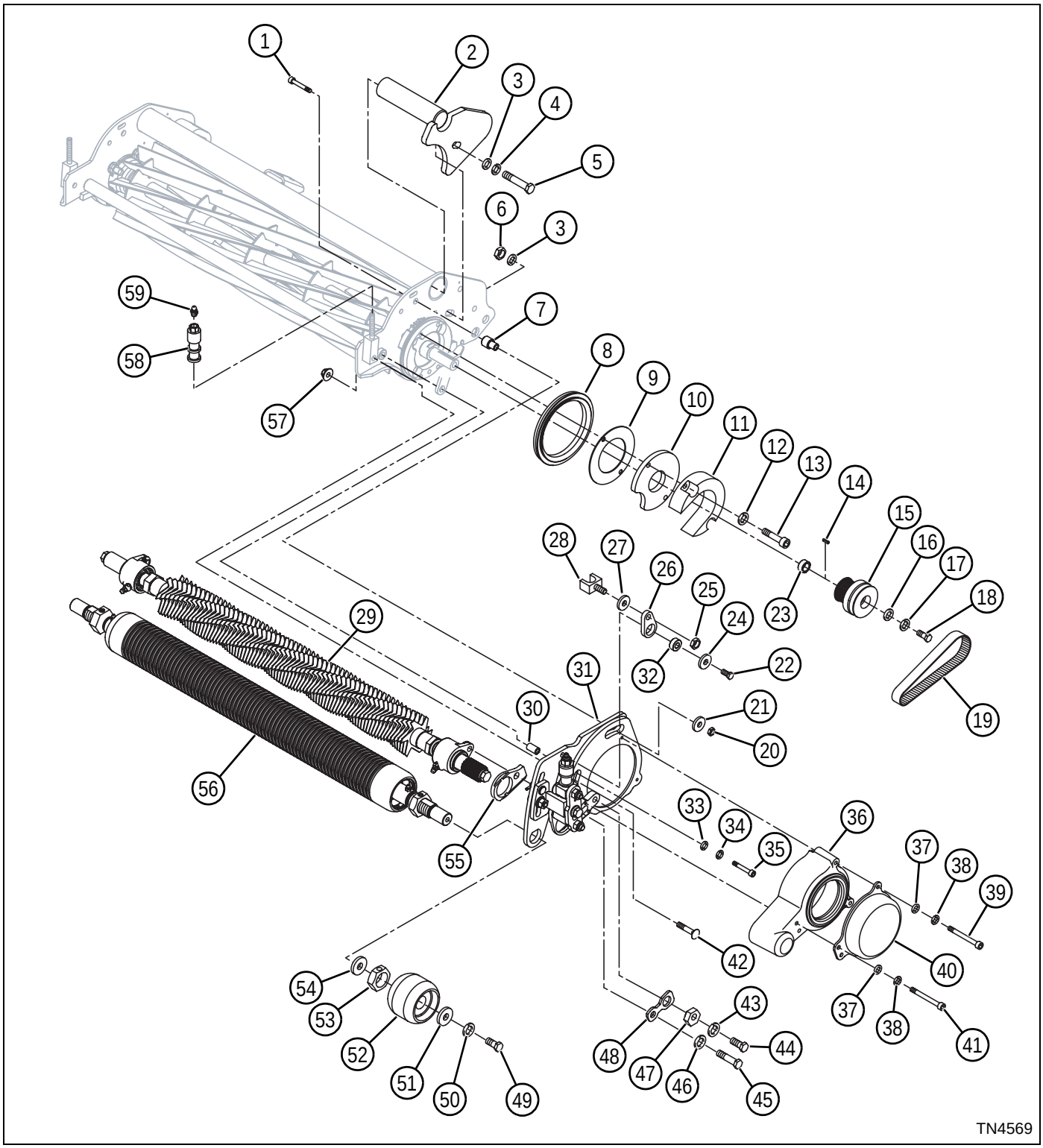

Figure 10-28

1. Park the mower safely. (See “Park Mower Safely” on page 1-5.)
2. Remove two screws (39), lock washers (38), and flat washers (37).
3. Remove two screws (41), lock washers (38), and flat washers (37).
4. Remove pulley cover (40) and groomer cover (36).
5. Loosen screws (44 and 45).
6. Rotate eccentric (47) to move groomer blade assembly shaft in slot so groomer blade assembly shaft and reel shaft are as close together as possible.
7. Remove screw (18), lock washer (17), and flat washer (16).
8. Remove pulley (15) and belt (19).
9. Remove key (14) and spacer (23) from reel shaft.
10. Remove screw (22), washer (24), spacer (32), and remove components (25–28) as an assembly.
11. Remove screw (49), lock washer (50), and spacer (51).
12. Remove guide wheel (52).
13. Remove nut (53) and two washers (54) from groomer roller (56).
14. Remove screw (45) and lock washer (46).
15. Remove screw (44), lock washer (43), eccentric (47), and belt tension link (48).
16. Remove nut (57) and carriage bolt (42).
17. Remove screw (35), lock washer (34), and flat washer (33).
18. Remove nut (20), spacer (21), and screw (1).
19. Remove drive assembly (31), spacer (30), and slide spacer (7).
20. Remove bearing housing plate (55) from groomer blade assembly (29).
21. Remove two screws (13) and lock washers (12).
22. Remove weight cover (11), weight (10), and cover plate (9).
23. Remove V-ring seal (8).
24. Remove nut (6), screw (5), lock washer (4), and two flat washers (3).
25. Remove weight (2).
26. Remove adjustment knob (58), and grease fitting (59) as an assembly.

Driven Side

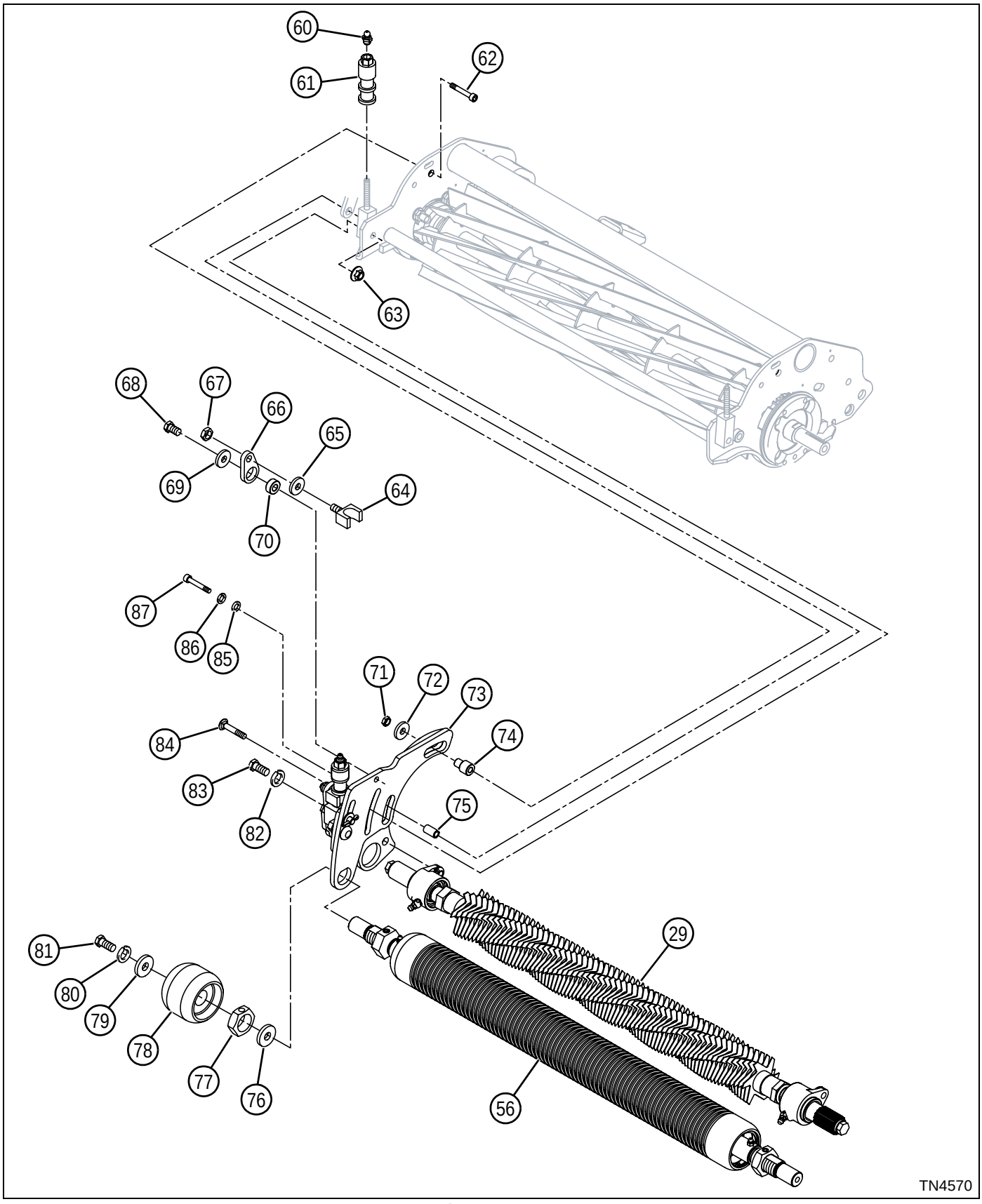

Figure 10-29

27. Remove screw (68), washer (69), spacer (70), and remove components (64–67) as an assembly.
28. Remove screw (81), lock washer (80), and spacer (79).
29. Remove guide wheel (78).
30. Remove nut (77) and two washers (76) from groomer roller (56).
31. Remove screw (83) and lock washer (82).
32. Remove groomer blade assembly (29).
33. Remove nut (63) and carriage bolt (84).
34. Remove screw (87), lock washer (86), and flat washer (85).
35. Remove screw (62), nut (71), and spacer (72).
36. Remove driven assembly (73), spacer (75), and side spacer (74).
37. Remove adjustment knob (61), and grease fitting (60) as an assembly.

Assembly Notes

- *Inspect parts for wear or damage and replace as necessary.*
- *Install turf groomer by reversing the order of removal.*
- *Use new V-ring seal (8).*
- *Lubricate grease fittings (59 and 60) with grease that meets or exceeds NLGI Grade 2 LB specifications. Clean grease fittings before lubricating and apply grease to the fittings with a hand grease gun only. Pump the gun slowly until a slight amount of pressure is felt, then stop—do not over-grease. Do not use compressed air gun.*
- *Adjust bearing. (See “Bearing Adjustment” on page 10-5.)*
- *Align blades to roller. (See “Blade-to-Roller Alignment” on page 10-7.)*
- *Adjust height-of-cut. (See “Height-of-Cut Adjustment” on page 10-4.)*
- *Adjust belt (20) tension. (See “Belt Adjustment” on page 10-6.)*

Turf Groomer—Drive and Driven Assemblies

Disassembly and Assembly

See Figure 10-30.

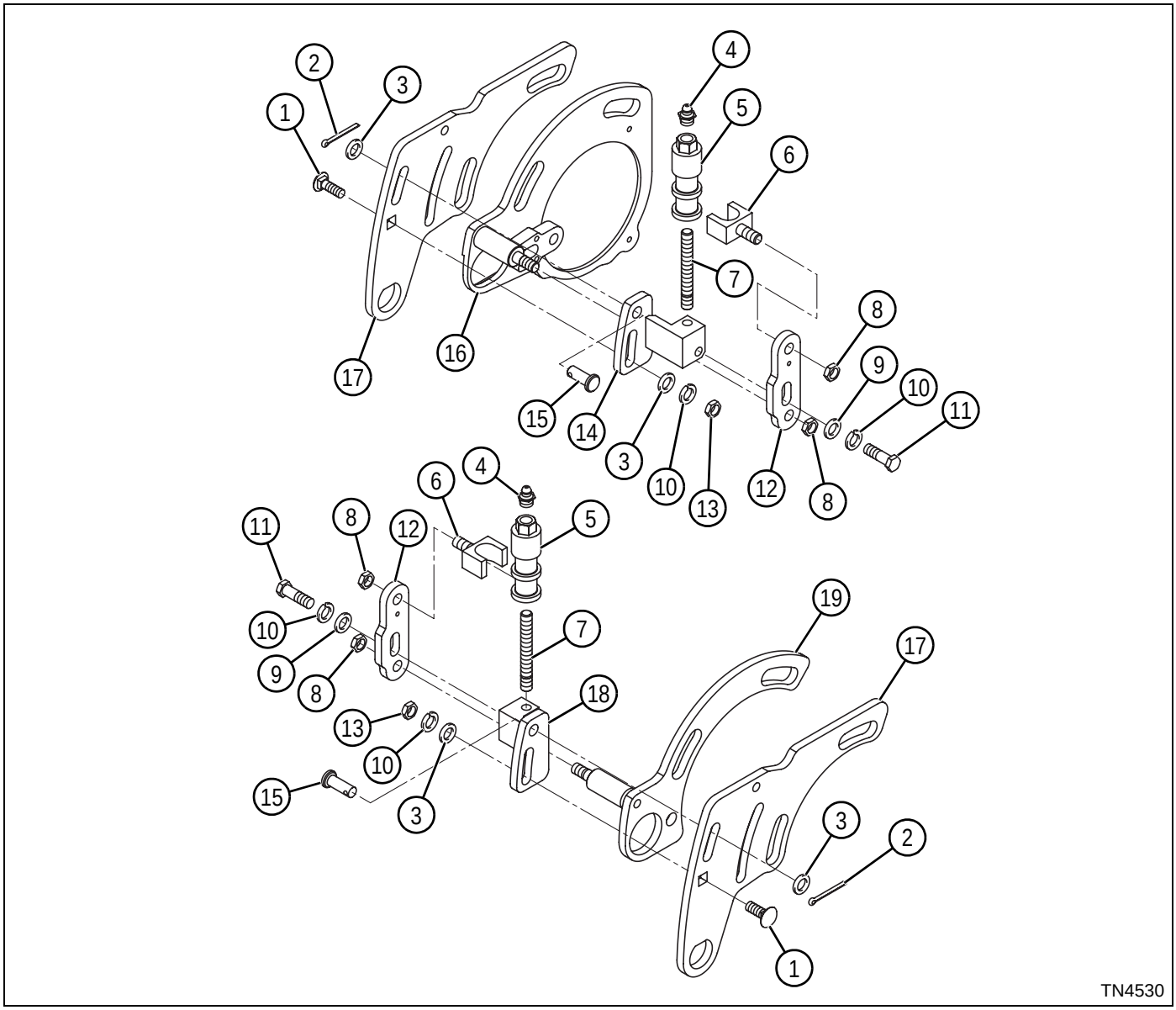

1	Carriage Bolt (2)	5	Knob Adjustment (2)	9	Flat Washer (4)	13	Flat Washer (4)	17	Groomer Bracket (2)
2	Cotter Pin (2)	6	Adjuster Bracket (2)	10	Lock Washer (4)	14	Lift Bracket	18	Lift Bracket
3	Flat Washer (4)	7	Stud (2)	11	Screw (2)	15	Pin (2)	19	Left Hand Driven Bracket
4	Grease Fitting (2)	8	Nut (3)	12	Push Groomer Plate (2)	16	Left Hand Drive Bracket		

Figure 10-30

Turf Groomer—Groomer Blade Assembly

Disassembly and Assembly

See Figure 10-31.

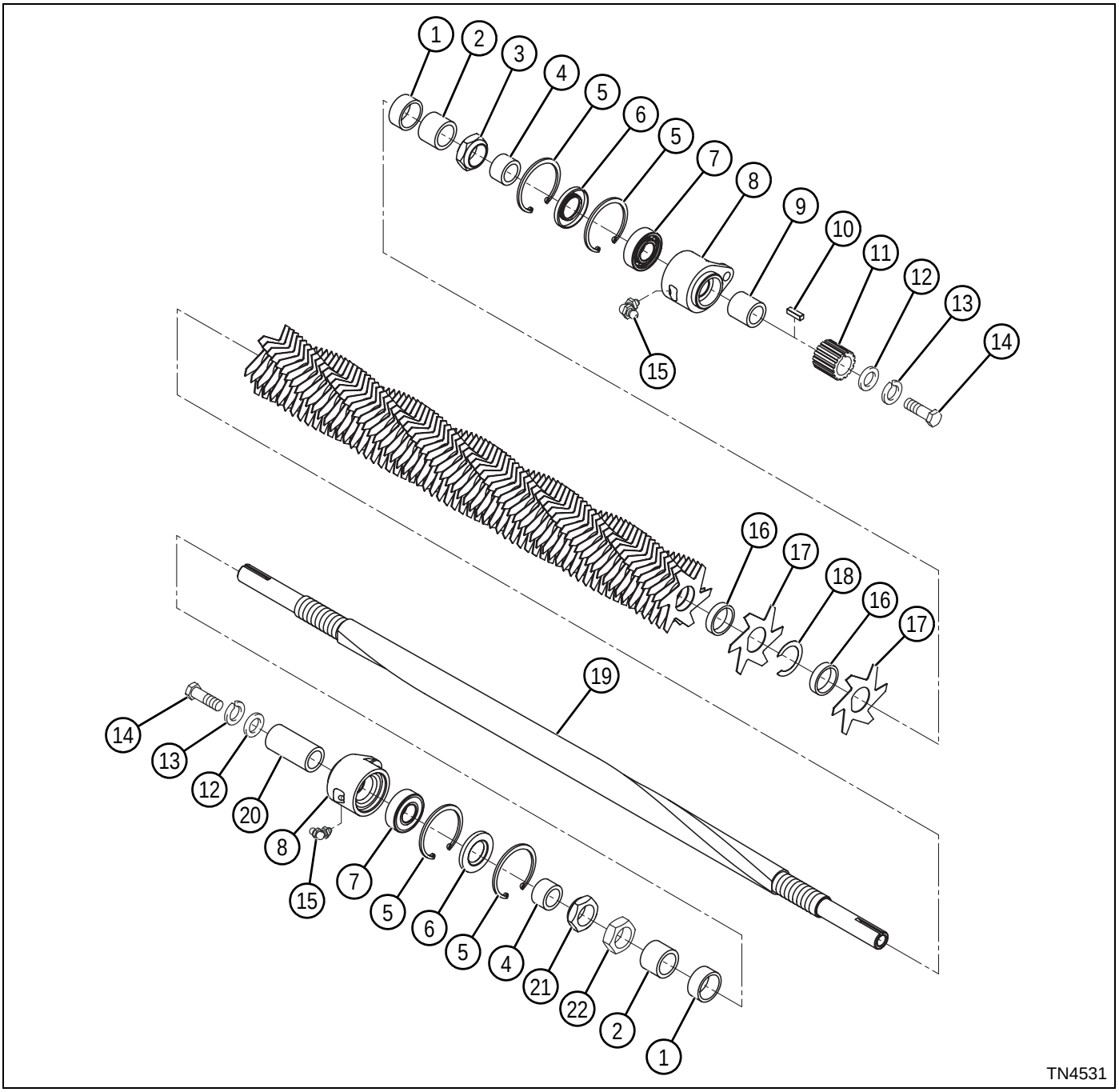

1	Spacer (2)	6	Grease Seal (2)	11	Pulley	15	Grease Fitting (2)	19	Shaft
2	Spacer (2)	7	Ball Bearing (2)	12	Flat Washer (2)	16	Spacer, 22 x 1/4 in. Blade Spacing (70)	20	Spacer
3	Lock Nut	8	Bearing Housing (2)	13	Lock Washer (2)	17	Blade, 22 x 1/4 in. Blade Spacing (71)	21	Lock Nut
4	Spacer (2)	9	Spacer	14	Screw (2)	18	Shim (As Required)	22	Jam Nut
5	Snap Ring (2)	10	Key						

Figure 10-31

Turf Groomer—Roller Assembly

Disassembly and Assembly

See Figure 10-32.

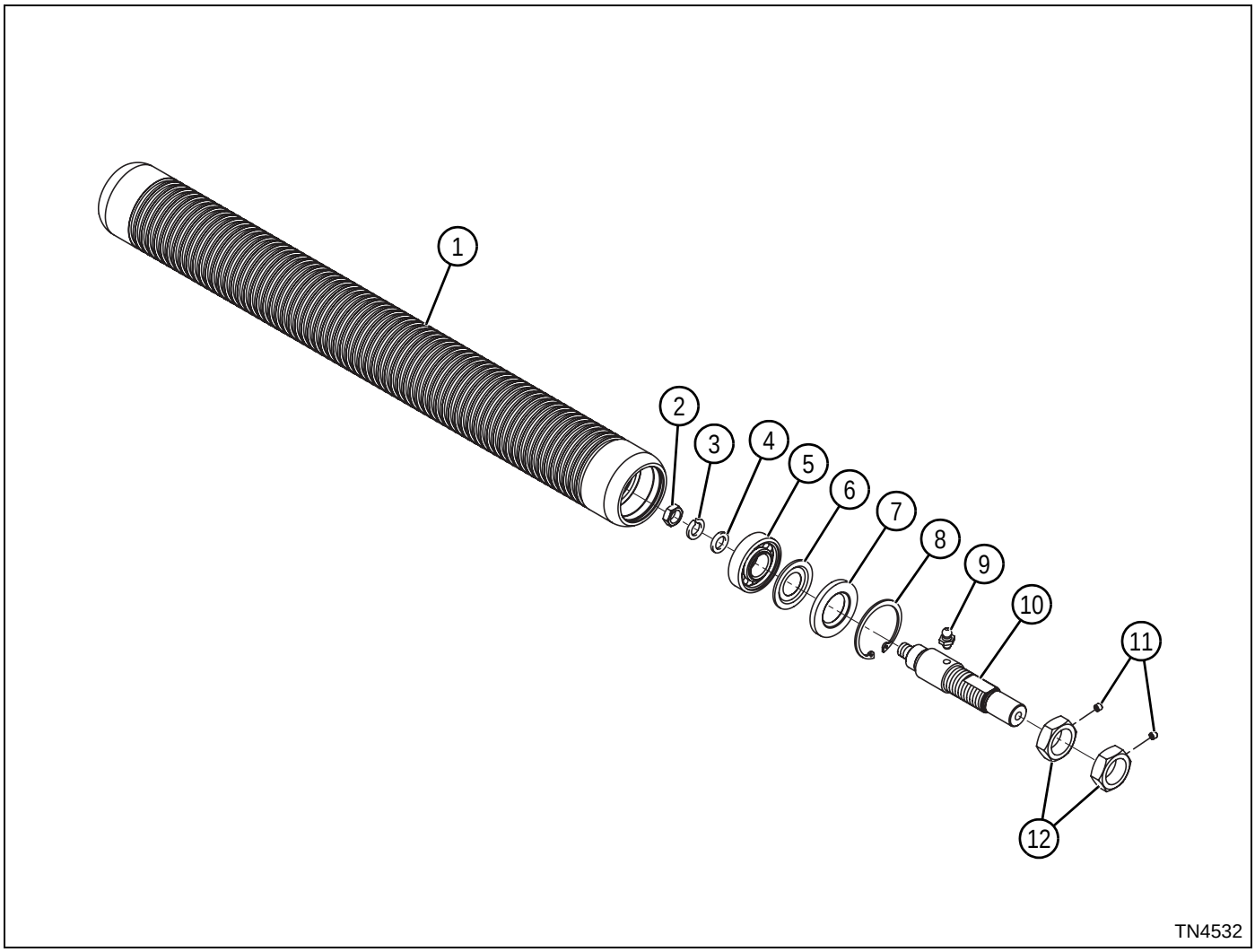

1	Roller Tube	4	Flat Washer (2)	7	Grease Seal (2)	10	Shaft
2	Jam Nut (2)	5	Ball Bearing (2)	8	Snap Ring (2)	11	Set Screw (4)
3	Lock Washer (2)	6	Nylos Ring (2)	9	Grease Fitting (2)	12	Nut (4)

Figure 10-32

INDEX

Numerics

120 Ohm Resistor Connector
Test ***4-51***

30A Fuse
Removal and Installation ***4-60***
Repair ***4-60***
Test ***4-50***

48-Volt Power Circuit
Theory of Operation ***4-15***

A

Accessories
Checks and Adjustments ***10-3***
Repair ***10-8***
Specifications ***10-2***

Adjustments
Battery Tray ***8-15***
Bedknife-to-Reel ***8-14***
Engine Fore/Aft ***8-15***
Grass Shield ***8-19***
Handle Height Adjustment ***6-3***
Height-of-Cut ***8-17***
Operator Presence Control (OPC) Cable Adjustment ***6-2***
Reel Bearing Pre-Load ***8-18***
Speed Paddle Stop ***6-3***

B

Bail Potentiometer
Removal and Installation ***4-70***
Repair ***4-70***
Test ***4-55***

Battery Gauge
Removal and Installation ***4-58***
Repair ***4-58***

Battery Pack
Assembly ***4-57***
Disassembly ***4-56***
Removal and Installation ***4-56***
Repair ***4-56***
Test ***4-45***

Battery Pack Fuse
Removal and Installation ***4-58***
Repair ***4-58***
Test ***4-50***

Battery Tray
Disassembly and Assembly ***4-69***
Installation ***4-69***
Removal ***4-69***
Repair ***4-69***

Bedknife
Removal and Installation ***8-24***
Repair ***8-24***

Bedknife Backing Assembly
Installation ***8-23***
Removal ***8-22***
Repair ***8-22***

Brake Control Lever
Removal and Installation ***6-11***
Repair ***6-11***

Brakes
Checks and Adjustments ***7-4***
Repair ***7-6***
Specifications ***7-2***
Troubleshooting ***7-3***

C

Ceramic Resistor
Test ***4-51***

Checks and Adjustments
Accessories ***10-3***
Backlapping Procedure ***8-15***
Battery Tray Adjustment ***8-15***
Bedknife-to-Reel Adjustment ***8-14***
Brakes ***7-4***
Engine Fore/Aft Adjustment ***8-15***
Grass Shield Adjustment ***8-19***
Handle and Controls ***6-2***
Height-of-Cut Adjustment ***8-17***
Park Brake ***7-4***
Power Train ***5-5***
Reel and Bedknife Inspection ***8-13***
Reel Bearing Pre-Load Adjustment ***8-18***
Traction Drive Belt Tension ***5-5***
Turf Groomer ***10-3***

Chemical Products
Safety ***1-9***

Component
Location ***2-4***

IX

Component Inspection
Inner Transfer Pulley ***5-8***
Outer Transfer Pulley ***5-8***

Component Location
Cutting Unit ***8-3***
Electrical ***4-4***
Power Train ***5-3***

Component Symbols
Actuating Devices ***4-7***
Circuit Protection Devices ***4-6***
Electrical ***4-6***
Lights ***4-7***
Miscellaneous Symbols ***4-8***
Motors and Generating Devices ***4-7***
Switches ***4-6***
Switching Devices ***4-6***

Component Testing
120 Ohm Resistor Connector Test ***4-51***
30A Fuse Test ***4-50***
Bail Potentiometer Test ***4-55***
Battery Pack Fuse Test ***4-50***
Battery Pack Test ***4-45***
Ceramic Resistor Test ***4-51***
Continuity Test ***4-44***
Electrical ***4-44***
Engine On/Off Switch Test ***4-47***
Gen-Set Output Test ***4-46***
Key Switch Test ***4-48***
Light Switch Test ***4-49***
Mow Switch Test ***4-49***
Reel Motor Test ***4-53***
Resistance Test ***4-44***
Throttle Potentiometer Test ***4-54***
Traction Motor Test ***4-52***

Compressed Air
Safety ***1-8***

Cutting Unit
Checks and Adjustments ***8-13***
Component Location ***8-3***
Mechanical Troubleshooting ***8-12***
Removal and Installation ***8-20***
Repair ***8-20***
Specifications ***8-2***
Troubleshooting ***8-3***

Cutting Unit Front Rollers
Installation ***10-15***
Removal ***10-8***
Repair ***10-8***

Cutting Unit Rear Roller
Removal and Installation ***8-33***
Repair ***8-33***

Cutting Unit Rear Roller Bearings
Installation ***8-34***
Removal ***8-34***
Repair ***8-34***

D

Differential Assembly
Disassembly and Assembly ***5-17***
Repair ***5-17***

E

Electrical
Component Identification ***4-10***
Component Location ***4-4***
Component Symbols ***4-6***
Component Testing ***4-44***
Harness Connector Identification ***4-9***
LCD Display Modes ***4-36***
Main Schematic ***4-12***
Repair ***4-56***
Specifications ***4-3***
Theory and Diagnostic Information ***4-15***
Troubleshooting ***4-34***

Electrical Component Service
Safety ***1-9***

Engine
Disassembly and Assembly ***3-4***
Removal ***3-4***
Repair ***3-4***
Specifications ***3-2***
Troubleshooting ***3-3***

Engine On/Off Switch
Test ***4-47***

F

Floating Head
Removal and Installation ***8-32***
Repair ***8-32***

Floating Head Roller
Removal and Installation ***8-34***
Repair ***8-34***

Floating Head Roller Bearings
Installation ***8-34***
Removal ***8-34***
Repair ***8-34***

IX

Fuel, Safety ***1-9***

G

Generator
Removal and Installation ***4-59***
Repair ***4-59***

Gen-Set
Output Test ***4-46***

Grass Shield
Removal and Installation ***8-21***
Repair ***8-21***

Grease
Specifications ***2-11***

Grooved Disc Roller
Assembly ***10-13***
Disassembly ***10-12***

Grooved Rollers
Assembly ***10-11***
Disassembly ***10-11***

Grooved Segmented Roller
Assembly ***10-14***
Disassembly ***10-13***

H

Handle and Controls
Checks and Adjustments ***6-2***
Repair ***6-4***

Handle and OPC Bail
Installation ***6-8***
Removal ***6-8***
Repair ***6-8***

Handle Assembly
Removal and Installation ***6-5***
Repair ***6-5***

Handle Cover
Removal and Installation ***6-4***
Repair ***6-4***

Harness Connector Identification
Electrical ***4-9***

Height-of-Cut
Adjustment ***8-17***

I

Inspect
Safety Labels ***1-5***

K

Key Switch
Operational Check ***2-12***
Removal and Installation ***4-60***
Repair ***4-60***
Test ***4-48***

Kickstand Assembly
Removal and Installation ***9-5***
Repair ***9-5***

L

Label Locations-Battery Pack
Safety ***1-4***

Label Locations-Gen-Set
Safety ***1-3***

LCD Display
Alert Displays ***4-36***
Audible Alert ***4-36***
Low Voltage ***4-36***
Maintenance Mode ***4-40***
Modes ***4-36***
Operator Mode ***4-38***
Overvoltage ***4-36***
Reel Motor Controller Fault ***4-37***
Reel Motor Fault ***4-37***
Traction Motor Controller Fault ***4-37***
Traction Motor Fault ***4-37***

Left Reel Bearing Housing Assembly
Disassembly and Assembly ***8-29***
Installation ***8-29***
Removal ***8-28***
Repair ***8-28***

Light Kit Assembly
Removal and Installation ***10-8***
Repair ***10-8***

Light Switch
Removal and Installation ***4-61***
Repair ***4-61***
Test ***4-49***

Lubricants
Specifications ***2-11***
Storage ***2-11***

IX

M

Machine Components
Location ***2-4***

Main Control Unit
Removal and Installation ***4-66***
Repair ***4-66***

Main Schematic
Electrical ***4-12***

Miscellaneous
Repair ***9-2***
Specifications ***9-2***

Mow Switch
Operational Check ***2-13***
Removal and Installation ***4-61***
Repair ***4-61***
Test ***4-49***

Mower Identification
Model Identification Number Location ***2-2***
Serial Number Location ***2-2***

O

OPC
Operational Check ***2-13***

OPC Cable
Removal and Installation ***6-10***
Repair ***6-10***

Operational Checks
Key Switch Check ***2-12***
Mow Switch Check ***2-13***
Operator Presence Control ***2-13***
Park Brake Check ***2-11***

P

Park Brake
Check and Adjustment ***7-4***
Operational Check ***2-11***

Park Brake Band
Installation ***7-8***
Removal ***7-8***
Repair ***7-8***

Park Brake Cable
Installation ***7-7***
Removal ***7-6***
Repair ***7-6***

Park Mower Safely-Battery Pack
Safety ***1-5***

Park Mower Safety-Gen-Set
Safety ***1-6***

Power Module Mount
Disassembly and Assembly ***4-69***
Installation ***4-69***
Removal ***4-69***
Repair ***4-69***

Power Train
Checks and Adjustments ***5-5***
Component Location ***5-3***
Repair ***5-7***
Specifications ***5-2***
Troubleshooting ***5-4***

Push Brush Assembly
Disassembly and Assembly ***10-17***
Repair ***10-17***

Q

Quality of Cut Symptoms
Marcelling ***8-5***
Rifling or Tramlining ***8-11***
Scalping ***8-7***
Step Cutting ***8-6***
Stragglers ***8-8***
Streaks ***8-9***
Washboarding ***8-4***
Windrowing ***8-10***

Quality-of-Cut Troubleshooting
Troubleshooting ***8-3***

Quick Reference Specifications
Accessories ***2-9***
Brakes ***2-8***
Cutting Unit ***2-9***
Electrical ***2-8***
Engine ***2-8***
Power Train ***2-8***
Specifications ***2-6***

R

Reel Assembly
Installation ***8-31***
Removal ***8-31***
Repair ***8-31***

Reel Control Unit
Removal and Installation ***4-67***
Repair ***4-67***

IX

Reel Motor
Removal and Installation ***4-62***
Repair ***4-62***
Test ***4-53***

Reel Motor Circuit
Schematic ***4-32***
Theory of Operation ***4-31***

IX

Repair
30A Fuse ***4-60***
Accessories ***10-8***
Bail Potentiometer ***4-70***
Battery Gauge ***4-58***
Battery Pack ***4-56***
Battery Pack Fuse ***4-58***
Battery Tray ***4-69***
Bedknife ***8-24***
Bedknife Backing Assembly ***8-22***
Brake Control Lever ***6-11***
Brakes ***7-6***
Cutting Unit ***8-20***
Cutting Unit Front Rollers ***10-8***
Cutting Unit Rear Roller ***8-33***
Cutting Unit Rear Roller Bearings ***8-34***
Differential Assembly ***5-17***
Electrical ***4-56***
Engine ***3-4***
Floating Head ***8-32***
Floating Head Roller ***8-34***
Floating Head Roller Bearings ***8-34***
Generator ***4-59***
Grass Shield ***8-21***
Handle and Controls ***6-4***
Handle Assembly ***6-5***
Handle Cover ***6-4***
Key Switch ***4-60***
Kickstand Assembly ***9-5***
Left Reel Bearing Housing Assembly ***8-28***
Light Kit Assembly ***10-8***
Light Switch ***4-61***
Main Control Unit ***4-66***
Miscellaneous ***9-2***
Mow Switch ***4-61***
OPC Cable ***6-10***
Park Brake Band ***7-8***
Park Brake Cable ***7-6***
Power Module Mount ***4-69***
Power Train ***5-7***
Push Brush Assembly ***10-17***
Reel Assembly ***8-31***
Reel Control Unit ***4-67***
Reel Motor ***4-62***
Right Reel Bearing Housing Assembly ***8-25***
Scraper Blade Assembly ***10-16***
Speed Paddle ***6-11***
Throttle Potentiometer ***4-65***
Traction Control Unit ***4-68***
Traction Drive Belt Cover ***5-7***
Traction Drive Belts ***5-7***
Traction Drive Drum and Bearing Housing Assembly ***5-10***
Traction Drum Assembly ***5-16***
Traction Drum Left Bearing Housing ***5-11***
Traction Drum Right Bearing Housing ***5-13***
Traction Motor ***4-63***
Transport Wheels ***9-2***
Turf Groomer ***10-19***
Turf Groomer—Drive and Driven Assemblies ***10-23***
Turf Groomer—Groomer Blade Assembly ***10-24***
Turf Groomer—Roller Assembly ***10-25***
Wheel Hubs and Bearings ***9-3***

Repair Handle and OPC Bail ***6-8***

Right Reel Bearing Housing Assembly
Disassembly and Assembly ***8-26***
Installation ***8-26***
Removal ***8-25***
Repair ***8-25***

S

Safety
Dispose of Waste Materials Safely ***1-10***
Fuel Handling ***1-9***
Handle Chemical Products Safely ***1-9***
Inspect Safety Labels ***1-5***
Introduction ***1-2***
Keep Work Area Clean ***1-5***
Keep Work Area Well Ventilated ***1-5***
Label Locations-Battery Pack ***1-4***
Label Locations-Gen-Set ***1-3***
Park Mower Safely-Battery Pack ***1-5***
Park Mower Safety-Gen-Set ***1-6***
Prepare for the Job ***1-2***
Safety Label Locations ***1-3***
Safety Notices ***1-2***
Service Electrical Components Safely ***1-9***
Service Tires Safely ***1-8***
Store Volatile and Hazardous Materials Safely ***1-9***
Support Machine Securely ***1-8***
Use Compressed Air and Air Tools Safely . . ***1-8***
Use Lifting Equipment Safely ***1-7***
Use Proper Eye and Face Protection ***1-5***
Work Area Ventilation ***1-5***

Safety Label
Locations ***1-3***

Schematic
48-Volt Power Circuit-Battery Pack ***4-16***
48-Volt Power Circuit-Gen-Set ***4-18***
Ignition Shutoff Circuit-Gen-Set ***4-20***
Main ***4-12***
Reel Motor Circuit ***4-32***
Switched Power Circuit ***4-24***
Traction Circuit ***4-28***

Scraper Blade Assembly
Removal and Installation ***10-16***
Repair ***10-16***

Solid Rollers
Assembly ***10-9***
Disassembly ***10-9***

Solid Tube Rollers
Assembly ***10-11***
Disassembly ***10-11***

Specifications
Accessories ***10-2***
Brakes ***7-2***
Cutting Unit ***8-2***
Electrical ***4-3***
Engine ***3-2***
General ***2-6***
Lubricants ***2-11***
Miscellaneous ***9-2***
Power Train ***5-2***
Quick Reference ***2-6***
Quick Reference Specifications ***2-6***
Standard Torque Values ***2-10***

Speed Paddle
Removal and Installation ***6-11***
Repair ***6-11***

Speed Paddle Stop
Adjustment ***6-3***

Switched Power Circuit
Schematic ***4-24***
Theory of Operation ***4-23***

Synthetic Lubricants
Specifications ***2-11***

T

Theory and Diagnostic Information
Electrical ***4-15***

Theory of Operation
48-Volt Power Circuit ***4-15***
Reel Motor Circuit ***4-31***
Switched Power Circuit ***4-23***
Traction Circuit ***4-27***

Throttle Potentiometer
Removal and Installation ***4-65***
Repair ***4-65***
Test ***4-54***

Tire Service
Safety ***1-8***

Torque Values
Inch Fasteners ***2-10***
Metric Fasteners ***2-10***

Traction Circuit
Schematic ***4-28***
Theory of Operation ***4-27***

Traction Control Unit
Removal and Installation ***4-68***
Repair ***4-68***

Traction Drive Belt
Tension Check and Adjustment ***5-5***

Traction Drive Belt Cover
Removal and Installation ***5-7***
Repair ***5-7***

Traction Drive Belts
Installation ***5-9***
Removal ***5-7***
Repair ***5-7***

Traction Drive Drum and Bearing Housing Assembly
Removal and Installation ***5-10***
Repair ***5-10***

Traction Drum Assembly
Disassembly and Assembly ***5-16***
Removal and Installation ***5-16***
Repair ***5-16***

Traction Drum Left Bearing Housing
Installation ***5-12***
Removal ***5-11***
Repair ***5-11***

Traction Drum Right Bearing Housing
Installation ***5-15***
Removal ***5-13***
Repair ***5-13***

Traction Motor
Installation ***4-64***
Removal ***4-63***
Repair ***4-63***
Test ***4-52***

Transport Wheels
Disassembly and Assembly ***9-2***
Removal and Installation ***9-2***
Repair ***9-2***

Troubleshooting
Brakes ***7-3***
Cutting Unit ***8-3***
Cutting Unit, Mechanical ***8-12***
Electrical ***4-34***
Engine ***3-3***
Power Train ***5-4***
Quality-of-Cut Troubleshooting ***8-3***

Turf Groomer
Checks and Adjustments ***10-3***
Removal and Installation ***10-19***
Repair ***10-19***

Turf Groomer—Drive and Driven Assemblies
Disassembly and Assembly ***10-23***
Repair ***10-23***

Turf Groomer—Groomer Blade Assembly
Disassembly and Assembly ***10-24***
Repair ***10-24***

Turf Groomer—Roller Assembly
Disassembly and Assembly ***10-25***
Repair ***10-25***

W

Waste Material Disposal
Safety ***1-10***

Wheel Hubs and Bearings
Assembly ***9-3***
Disassembly ***9-3***
Installation ***9-4***
Removal ***9-3***
Repair ***9-3***

Work Area
Ventilation ***1-5***

World Class Quality, Performance And Support

Equipment from Jacobsen is built to exacting standards ensured by ISO 9001 and ISO 14001 registration at all of our manufacturing locations.

A worldwide dealer network and factory trained technicians backed by Jacobsen Parts Xpress provide reliable, high-quality product support.

JACOBSEN®
A Textron Company

When Performance Matters.™

CUSHMAN E-Z GO JACOBSEN RANSOMES

Jacobsen, A Textron Company
11108 Quality Drive, Charlotte, NC 28273
www.Jacobsen.com
800-848-1636

JACOBSEN®
A Textron Company

When Performance Matters.™

jacobsen.com

For assistance with Sales, Service, Warranty and Technical Support, or to order manuals, contact your local Jacobsen dealer: www.jacobsen.com/dealer-locator

GCSAA PARTNER

The Official Turf Equipment Supplier to The PGA of America and
The Exclusive Turf Equipment Supplier to PGA Golf Properties.