Safety, Operation & Maintenance Manual

068021-B000 - TR320, Kubota® D1105-E4B, 3WD
068021-B100 - TR320, Kubota® D1105-E4B, 3WD

Series EP / EP1

⚠ WARNING

WARNING: If incorrectly used this machine can cause severe injury. Those who use and maintain this machine must be trained in its proper use, warned of its dangers and must read the entire manual before attempting to set up, operate, adjust or service the machine.

GB
United Kingdom

RJL 100 August 2019

677802-A-GB

1 CONTENTS

SECTION PAGE

INTRODUCTION
- Important ... 3
- Product Identification ... 4
- Guidelines For The Disposal Of Scrap Products ... 6
- During Service Life ... 6
- End Of Service Life ... 6
- Parts Manual ... 7
- Key Numbers ... 7

SAFETY INSTRUCTIONS
- How To Operate Safely ... 9
- Safe Operation ... 9
- Preparation ... 9
- Operation ... 10
- Rollover Protective Structure ... 11
- Safe Handling Of Fuels ... 11
- Maintenance And Storage ... 12
- When You Put The Mower On A Trailer ... 12
- Important Safety Notes ... 13

LABELS
- Safety Labels EC ... 16
- Instruction Labels EC ... 18

CONTROLS
- Operator Workstation ... 20
- Control Panel ... 21
- Key Switch ... 22
- Light Switch (Optional) ... 22
- Parking Brake Switch ... 22
- Mow Switch ... 22
- Backlap Switch Optional ... 23
- Glowplug Indicator L.E.D ... 23
- Multi Function Gauge ... 23
- Multi Function Gauge - Hydraulic Oil Temperature ... 24
- Multi Function Gauge - Blocked Hydraulic Filter ... 24
- Multi Function Gauge - Engine Temperature Warning Lamp ... 24
- Multi Function Gauge - Engine Oil Pressure Warning Lamp ... 25
- Multi Function Gauge - Charge Warning Lamp ... 25
- Multi Function Gauge - Parking Brake ... 25
- Weight Transfer Switch ... 26
- Lift / Lower Switch ... 26
- Throttle Lever ... 26
- Armrest Adjuster ... 26
- Traction Pedal ... 27
- Mow Speed lever ... 27
- Steering Tilt Control ... 27
- Power Outlet (Optional) ... 28
- Tow Valve ... 28
- Parking Release Valve ... 28
- Fuel Gauge ... 29

OPERATION
- Daily Inspection ... 30
- Operator Presence And Safety Interlock System ... 31
- Procedure For Operation ... 32
- To Fit The Cutting Units To The Machine ... 33
- Operation Of The Machine ... 34
- How To Start The Engine ... 34
- How To Drive ... 35
- How To Mow ... 35
- To Stop The Engine ... 35
- How To Remove A Blockage From Cutting Units ... 36
- Backlapping ... 36
- Transporting ... 38
- Transporting On A Trailer Or Flatbed ... 38
- Jacking Point ... 38
- Mowing On Slopes ... 39

ADJUSTMENTS
- General Precautions ... 42
- Traction Control ... 42
- Weight Transfer Adjustment ... 43
- Engine: Fan Belt ... 43
- Neutral Switch Adjustment ... 44
- Armrest Height Adjustment ... 44
- Traction Pedal Stops ... 45
- Front Cutting Unit Limit Switch ... 45
- Bedknife To Reel ... 46
- Bedknife Adjustment ... 47
- Cutting Modes ... 47
- Cutting Height Adjustment ... 48
- Cutting Height Floating ... 49
- Height Of Cut ... 50
- To Set Rear Roll ... 50
- Set Height Of Cut ... 51
- Reel To Bedknife Adjustment ... 52
- Seat (Milsco V-2853) ... 53
- Seat (Michigan V-5300) ... 53
- Torque Specification ... 54

MAINTENANCE AND LUBRICATION
- Maintenance And Lubrication Charts ... 56
- General Precautions ... 59
- Engine ... 59
- Engine Lubrication ... 60
- Engine Coolant ... 61

SECTION PAGE
- Engine: Fan Belt - Diesel ... 62
- Hydraulic Filter ... 63
- Hydraulic System ... 63
- Hydraulic Hoses ... 64
- Fuel ... 65
- Replacing Fuel Filters ... 66
- Fuel System ... 66
- Air Cleaner ... 67
- Engine Exhaust ... 67
- Cutting Units 673953/54/55, 671604/05/06, 673956/57/58 Lubrication ... 69
- Cutting Units 068093/ 068094 /068097 Lubrication ... 69
- Backlap ... 70
- Battery ... 70
- Charging The Battery ... 71
- Tyres ... 72
- Wheel Mounting Procedure ... 72
- ROPS ... 73
- Care And Cleaning ... 74
- Mower Storage ... 75

PROBLEM SOLVING
- Engine Problem Diagnostics ... 76

QUALITY OF CUT
- Quality Of Cut Problem Solving ... 78
- The Step Cut ... 79
- Scalping ... 80
- Stragglers ... 81
- Streaks ... 82
- Windrowing ... 83
- Mismatched Cutter Decks ... 84

FUSES AND RELAYS
- Fuse And Relay/Component Identification ... 86

SPECIFICATIONS
- Engine Specification ... 89
- Dimensions And Weights ... 90
- Machine Specification ... 92
- Hydraulic Specification ... 92
- Vibration ... 93
- Noise ... 94
- Slopes ... 94
- Cutting Unit Specification ... 95
- Cutting Performance ... 96
- Recommended Lubricants ... 96
- Accessories ... 96

GUARANTEE
- Warranty ... 98
- Service ... 98

© 2018, Jacobsen. All Rights Reserved

2.1 IMPORTANT

The TR320 with Diesel engine is a self propelled Cylinder mower. With hydraulic systems to power the traction drive, the cutting unit lift and lower, the cutting unit drives and the steering.

IMPORTANT: Do the maintenance indicated in this manual to make sure that the quality of cut is kept at a high level.

This Manual is part of the machine and must stay with the machine always. The suppliers of new, or used, machines need to keep this documentation and supply the owners with a copy.

You must use the machine to cut the grass only and not for any other purpose. The Compliance with these conditions of The operation, service and repair specified by the manufacturer, are understood to be part of the correct use.

ALL operators **MUST** read through this manual and understand the Safety Instructions, controls, lubrication and maintenance procedures.

Make sure that you obey all safety and road traffic regulations.

You must not make any changes to the machine that are not approved by the manufacturer. Unapproved changes can release the manufacturer from liability for any damage or injury.

Discard worn parts in alignment with all local environment protection regulations. Use the local systems available in the country where the machine is used, for these materials. When the machine is at its end of life, there are guidelines in this manual for the removal of the machine from use.

Use only Ransomes Jacobsen Genuine spare parts to meet the machine type approval regulations specified by the European Union.

2006/42/EC
These instructions are the Original instructions confirmed by Ransomes Jacobsen Limited

2.2 PRODUCT IDENTIFICATION

A	Maximum front axle load in Kg (for all machines being driven on the highway)
B	Weight-Mass in Kg
C	Maximum rear axle load in Kg (for all machines being driven on the highway)
D	Power Rating in Kw
E	Date code
F	Machine type (Name)
G	Product code
H	Product name
J	Serial number

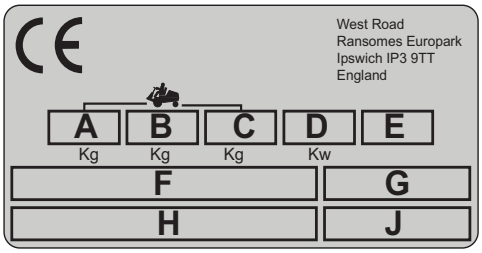

Location of Serial number plate

The serial number plate is found on right hand side of the operators platform.



Chassis Stamp

The Serial number and date code are shown on the right hand chassis rail between the ROPS mounting bracket and engine hood.



Engine Identification

Serial number plate

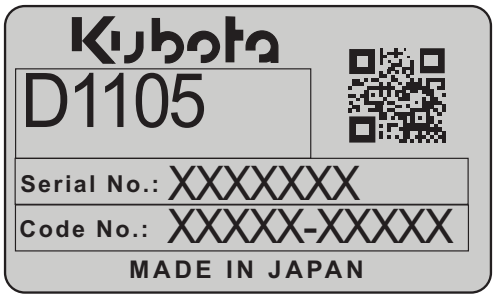

Location of Serial number plate

The engine serial number is found on the top of the valve cover toward the front of the mower. Label shows the engine group and serial number.

The engine serial number is also found on the engine block.

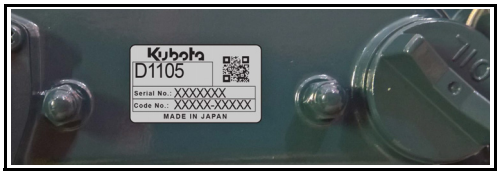

ROPS Serial number plate

A	Weight of ROPS
B	Date Code
C	Standard Used
D	Part Number
E	For Product
F	Serial Number

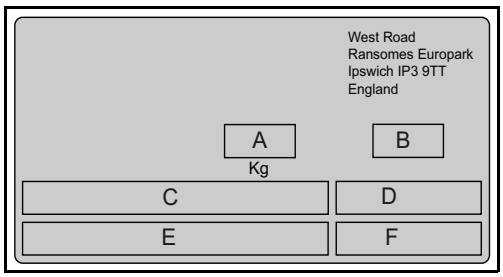

ROPS Serial number plate Location

The ROPS serial number plate is found on the right hand ROPS mount.



2.3GUIDELINES FOR THE DISPOSAL OF SCRAP PRODUCTS

2.3.1 DURING SERVICE LIFE

All the used fluids and parts must be controlled as hazardous materials. Recommended procedures must be followed for their safe removal.

If a fluid leak occurs, contain the spill to make sure that the leak does not flow into the ground or drainage system. Follow the regulations in force to make sure that leaks are controlled.

The maintenance procedures in this manual make sure that the damage that the machine can cause in the local environment is controlled.

When the machine completes its full service life, the following actions must be taken.

2.3.2 END OF SERVICE LIFE

These guidelines must be used with applicable Health, Safety and Environmental laws. Always use the approved local waste disposal and agencies for recycled materials.

- Park the machine in an applicable area to use all of the necessary lifting equipment.
- Use correct tools and Personal Protective Equipment (PPE) and take instruction from the technical manuals applicable to the machine.
- Remove and store correctly
  1. Batteries
  2. Fuel
  3. Engine coolant
  4. Oils
- Read the Technical Manual before you begin to disassemble the machine. Plan the disassembly, give attention to parts that are in a state of mechanical pressure or contain stored energy e.g springs.
- Items that continue to have a service life must be separated and returned to the local dealer.
- Items that are worn must be separated into the material groups and removed according to the agencies for the recycled materials that are available. Common examples.
  - Steel
  - Non ferrous metals
    - Aluminium
    - Brass
    - Copper
  - Plastic materials
    - Identified
    - Can be recycled
    - Can not be recycled
    - Not identified
  - Rubber
  - Electrical and Electronic Components
- Some parts are not easily separated e.g Hydraulic hose. These materials must be added to the “General discarded materials” area.
- Do not burn discarded materials.

Change the machinery records to show that the machine is not in operation and is discarded. Supply this serial number to The Ransomes Jacobsen Warranty Department to close their records.

2.4 PARTS MANUAL

To meet the standard ISO14001, Ransomes Jacobsen Limited does not send a paper parts manual with every product.

To refer to the parts list for this mower you have four options:

1. Website – www.ransomesjacobsen.com. Select the “ONLINE PARTS LOOK-UP” tab. These pages will show the parts list and the line drawings you need to help with the identification of spare parts.

2. Website – www.ransomesjacobsen.com. Select the “MANUALS” tab. You have the option to view or “Download” a PDF version of the parts manual.

3. Complete the form included in the technical manual pack supplied with the machine for one of the two options below
   a. A disc that contains an electronic copy of the Parts Book.
   b. A paper copy of the parts manual.

2.5 KEY NUMBERS

Record the key numbers

Ignition Key:- - - -

NOTES

3.1 HOW TO OPERATE SAFELY

WARNING

EQUIPMENT OPERATED INCORRECTLY OR WITHOUT TRAINING CAN BE DANGEROUS.
Know the location and correct operation of the controls. Potential operators must receive training from a person trained in the correct operation of the mower.

Only use parts, accessories and attachments approved by Ransomes Jacobsen.

3.1 SAFE OPERATION

a Read the Operator's Manual and other training material. If the operator or technician can not read this manual, the owner is responsible to describe this material to the operators and technicians. Manuals in additional languages may be available on the Jacobsen or Ransomes Jacobsen website.

a Read all of the instructions for this mower carefully. Know the controls and the correct operation of the equipment.

b Children or persons who do not understand these instructions must not use the mower. The local regulations can limit the age of the operator.

c Never use a mower near persons, including children or animals.

d Remember that the operator or owner is responsible for accidents or hazards that occur to other persons or their property.

e Never carry passengers.

f Never allow persons to operate or service the mower or its attachments without correct instructions.

g Do not operate equipment while tired, sick or after you use alcohol or drugs.

3.2 PREPARATION

a When you operate the mower, wear correct clothing, slip resistant work shoes or boots, work gloves, hard hat, safety glasses and hearing protection. Long hair, loose clothing or jewelry can be caught in moving parts.

b Do not operate the equipment with the Interlock system disconnected or if the system does not operate correctly. Do not disconnect or prevent the operation of any switch.

c Never operate equipment that is not in correct order or with damaged or missing labels, decals, guards, shields, deflectors or without other protective devices properly installed. When you mow with a side discharge deck, **DO NOT** operate the cutting unit without the discharge chute installed.

d Inspect the machine before you operate the mower. Check the tyre pressure, engine oil level, the radiator coolant level and the air cleaner indicator. Fuel is flammable. Use caution when you add the fuel to the mower.

e Operate the mower in daylight or in good artificial light. Use caution when you operate the mower during bad weather. Never operate the mower with lightning in the area.

f Inspect the area, then select the accessories and attachments that are needed to correctly and safely do the job. Only use parts, accessories and attachments approved by manufacturer.

g Be careful of holes in the terrain and other hazards that are not visible.

h Inspect the area where the equipment is operated. Remove all objects you can find before you operate. Be careful of obstructions above the ground (low tree limbs, electrical wires) and also underground obstacles (sprinklers, pipes, tree roots). Enter a new area carefully. Look for possible hazards.

i Inspect the cutting system before you start the mower. Make sure the blades are free to rotate. When you rotate one blade, other blades can rotate.

3.3 OPERATION

a Never operate the engine without enough ventilation or in an enclosed area. The carbon monoxide in the exhaust fumes can increase to dangerous levels.

b Never carry passengers. Keep other persons or animals away from the mower.

c Disengage all drives and engage the parking brake before you start the engine. Only start the engine with the operator in the seat. Never start the engine with persons near the mower.

d Keep your legs, arms and body inside the operator compartment while the mower is in operation. Keep your hands and feet away from the cutting units.

e Do not use on the slopes greater than the safe slope limit for the equipment.

f To guard against overturning or loss of control:

- Operate the mower up and down on the face of slopes (vertically), but not across the face (horizontally).
- Do not start or stop suddenly on slopes.
- Decrease the speed when you operate on slopes or when you must turn. Use caution when you change direction. Turf condition can change the mower stability.
- Use caution when you operate the mower near drop-offs, ditches or embankments.
- Be careful of holes in the terrain and other hazards that are not visible.

g When you drive in the reverse direction, look behind you and down to make sure the path is clear. Do not operate the cutting units when you drive in the reverse direction.

h Use caution when you go near corners, trees or other objects that can prevent a clear view.

i Equipment must meet the current regulations to be driven on the public roads.

j Before you move across or operate on the paths or roads, turn off the PTO switch, lift the mowers and travel at decreased speed. Look for traffic.

k Stop the blades when the mower is on any surface that is not grass.

l Do not release the cut grass in the direction of persons or allow persons near the mower while in operation.

m Do not operate the mower with damaged guards or without safety devices in position.

n Do not change the engine governor setting or over-speed the engine. Never change or tamper with adjusters that are closed with a seal for the engine speed control.

o Before you leave the operator compartment, for any reason:

- Disengage all the drives and lower attachments to the ground.
- Engage the parking brake.
- Stop the engine and remove the key.

p When the mower has hit an object or an unusual vibration is noticed, inspect the mower for damage. Damage must be repaired before returning the mower to service.

q Decrease the throttle setting before you stop the engine.

r Do not use this equipment for uses that the mower was not made for.

3.3.1 ROLLOVER PROTECTIVE STRUCTURE

a The ROPS is a safety device. Always use the seat belt when you operate the mower. Make sure the seat belt can be released quickly in an emergency.

b Inspect the ROPS for damage. Keep the ROPS hardware fastened.

c Do not weld, drill, change or bend the ROPS. Replace a damaged ROPS. Do not try to correct a damaged ROPS.

d Do not remove the ROPS from the mower.

e Ransomes Jacobsen must approve any changes to the ROPS.

3.3.2 SAFE HANDLING OF FUELS

a The fuel and the fuel vapors are flammable. Use caution when you add the fuel to the mower. The fuel vapors can cause an explosion.

b Never use the containers that are not approved to keep or transfer fuel.

c Never keep the mower or fuel containers near an open flame or any device that can cause the ignition of fuel or fuel vapors.

d Never fill the fuel containers inside a vehicle or on a truck or trailer with a plastic liner. Always put the fuel container on the ground away from your vehicle before you fill the container.

e Refuel the mower before you start the engine. When the engine is in operation or while the engine is hot, never remove the fuel cap or add fuel to the mower.

f Refuel outdoors only and do not smoke when you add fuel. Extinguish all types of ignition.

g The fuel nozzle must touch the rim of the fuel tank when you add fuel to the mower. Do not use a device to lock the fuel nozzle in the open position.

h Do not over fill the fuel tank. Leave at least 1 inch (25 mm) below the filler neck.

i Always tighten the fuel tank cap and container cap after you add fuel.

j If the fuel spills on your clothing, change your clothing immediately.

3.3.3 MAINTENANCE AND STORAGE

a Before you clean, adjust or repair this equipment, push PTO switch to the OFF position, lower the cutting unit to the ground, engage the parking brake, stop the engine and remove the key.

b Make sure the mower is parked on a solid and level surface.

c Never work on a mower that is supported only by the jack. Always use the jack stands.

d Never allow persons to service the mower or its attachments without correct instructions.

e When the mower is parked, put into storage or left without an operator, lower the cutting device unless a positive mechanical lock is used.

f When you put the mower on a trailer or put the mower in storage, close the fuel valve. Do not keep fuel near flames or drain the fuel inside a building.

g Disconnect the battery before you service the mower. Always disconnect the negative battery cable before the positive battery cable. Always connect the positive battery cable before the negative battery cable.

h Charge the battery in an area with good airflow. The battery can release hydrogen gas that is explosive. To prevent an explosion, keep any device that can cause sparks or flames away from the battery.

i Disconnect the battery charger from the power supply before you connect or disconnect the battery charger to the battery. Wear protective clothing and use insulated tools when you service the battery.

j Be careful and wear gloves when you check or service the cutting unit blades. Replace any damaged blades, do not try to correct a damaged blade.

k Keep your hands and feet away from parts that move. Do not adjust the mower with the engine in operation, unless the adjustment needs the engine in operation.

l Carefully release the pressure from components with stored energy.

m To prevent injury from the hot, high pressure oil, never use your hands to check for oil leaks. Use the paper or cardboard to find leaks.

n The hydraulic fluid pressure can have enough force to enter your skin. If hydraulic fluid has entered your skin, a doctor must remove the hydraulic fluid surgically within a few hours or gangrene can occur.

o When you service the hydraulic system, make sure the hydraulic fittings, tubes and hoses are tightened to the correct torque. Make sure the hydraulic system is in good condition before you start the engine.

p Keep the mower and the engine clean.

q Allow the engine to become cool before storage and always remove the ignition key.

r Keep all nuts, bolts and screws tight to make sure the equipment is in safe condition.

s Replace worn or damaged parts for safety. Replace damaged or worn labels. Only use parts, accessories and attachments approved by Ransomes Jacobsen.

t To decrease the fire hazard, remove materials that burn from the engine, muffler, battery tray and fuel tank area.

u Disconnect the battery and controller connectors before you weld on this mower.

3.3.4 WHEN YOU PUT THE MOWER ON A TRAILER

a Be careful when you load or unload the mower on a trailer. Trailer must be wider than the mower and can carry the weight of the mower.

b Use a full-width ramp to load or unload the mower on a trailer Be careful when loading or unloading the mower..

c Use straps, chains, cables or ropes to fasten the mower to the trailer. Both front and rear straps must be sent down and toward sides of trailer.

Make sure that all latches are correctly fastened.

3.3.5 IMPORTANT SAFETY NOTES

This safety alert symbol is used to alert you to possible hazards.

DANGER:
Indicates a hazardous situation which, if not avoided, will result in death or serious injury.

WARNING:
Indicates a hazardous situation which, if not avoided, will result in death or serious injury.

CAUTION:
Indicates a hazardous situation which, if not avoided, could result in minor or moderate injury.

NOTICE:
Only drive the machine at road speed when you are on a highway. You must not select road speed on grass areas or rough roads and gravel tracks.

Some illustrations in this manual can show shields, guards or plates removed for clearness. This equipment must not be operated without these devices correctly fastened in position.

WARNING

The Interlock System on this mower prevents the starting of the mower unless

a.) The parking brake is Engaged.
b.) The mow switch is in the OFF position,
c.) The traction pedal is in the Neutral position.
d) The operator is in the seat.

The system stops the engine when the operator leaves the seat (a) without the parking brake engaged or (b) the mow switch is not in the OFF position. NEVER operate the mower unless the Interlock System is working.

WARNING

1. **Before leaving the operator's position for any reason:**
   a. **Return traction pedal to the Neutral position.**
   b. **Disengage all drives.**
   c. **Lower all implements to the ground.**
   d. **Engage parking brake.**
   e. **Stop the engine and remove the ignition key.**
2. **Keep your hands, feet, and clothing away from moving parts. Wait for all movement to stop before you clean, adjust, or service the machine.**
3. **Keep the area of operation clear of all persons and animals.**
4. **Never carry any passengers.**
5. **Never operate the equipment without a correctly fastened grass deflector in position.**

By following all instructions in this manual, you increase the life of your machine and keep its maximum performance. Adjustments and maintenance must always be done by an approved technician.

If additional information or service is required, contact your authorized Ransomes Jacobsen Dealer. Your dealer has personnel trained in the latest service procedures for your equipment.

WARNING

California proposition 65
Engine exhaust, some of its constituents, and some vehicle components contain or release chemicals known to the state of California to cause cancer and birth defects or other reproductive harm.

WARNING

To prevent injury from the hot oil at high pressure, do not use your hands to check for oil leaks, make sure that you use paper or cardboard.
Release of hydraulic fluid at high pressure has enough force to enter through the skin. If the fluid enters through the skin, the fluid must be surgically removed within hours by a specialist doctor or gangrene may result.

WARNING

When the machine is driven off-road, a seat belt must be worn only when a ROPS frame is in position. This warning is because a seat belt must be worn with a ROPS to follow the machinery directive, 2006/42/EC sections 3.2.2, seating & 3.4.3, rollover. (ANSI b71.4-2012 section 20.7)
Ransomes Jacobsen Limited recommends that the owner/user of the machine completes a local risk assessment of the machine to find any conditions that do not follow this rule. e.g. When you drive the machine next to water or on the highway.

WARNING

Explosive gases are released by batteries. The battery contains corrosive acid and supply an electrical current that is high enough to cause burn injuries to the body.

WARNING

You must not use this machine to tow other vehicles.

WARNING

Ear protection must be worn when you operate machines with an operator ear noise level of more than 85 db(a) leq.

⚠ WARNING

Vibration Exposure Limits
Exposure limits are calculated as a combination of the vibration level (magnitude) of the tool and the Daily Exposure Time (Trigger Time). E.g. A product with 5m/s² vibration can be used up to 2 hours/day to reach the EAV and up to 8 hours/day to reach the ELV.
Exposure Action Value (EAV) - Daily vibration exposure A(8) = 2.5m/s²
Where daily vibration exposure A(8) is below 2.5m/s² the risk is relatively low and no action need be taken
Exposure Limit Value (ELV) - Daily Vibration Exposure A(8) = 5.0m/s²
If several tools are used the exposure values must be combined:
Total exposure is then the combined value of the activities

⚠ WARNING

Never mow if there is a risk of lightning or you hear thunder. If you are in the middle of mowing, stop in a safe place, turn off the engine and go inside a building.

⚠ CAUTION

When you do any welding on the machine, the battery, controller and display must be disconnected before you start. You must not open the controller. If the controller is opened, this can cancel all of the warranties and can cause the failure of the machine.

⚠ CAUTION

Personal protective equipment (PPE), for example safety glasses, leather work shoes or boots, a hard hat, leather work gloves and ear protection must be used after the owner/user completes a local risk assessment of the mower, to prevent injury.
Training in all manual operations must be given by an approved person before the machine is used the first time.

4.1 SAFETY LABELS EC



A



B



C



D



E



F



G



H



J



K

L

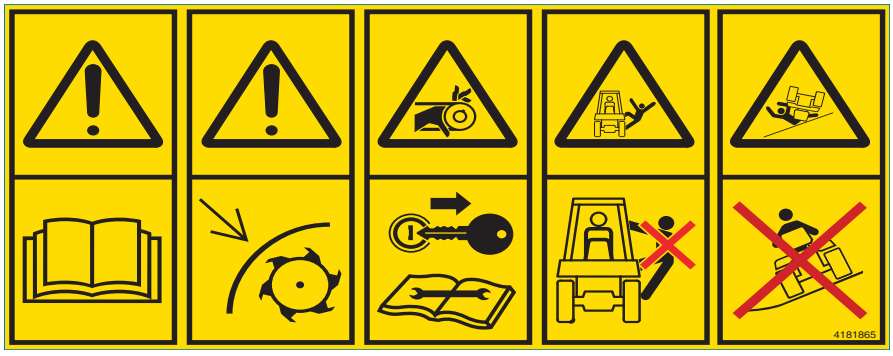

A.	009034920	Caution, Stay Away From Hot Surfaces.
B.	009034880	Caution, Fan Blade, Do Not Open Or Remove The Safety Shields While The Engine Is In Operation.
C.	009034900	Caution, Drive Belt, Do Not Remove The Safety Shields While The Engine Is In Operation.
D.	009114340	Caution, Diesel Fuel
E.	009114100	Caution, Battery
F.	009114550	Slope Angle.
G.	009034960	Caution, Rotating Blades
H.	009114380	Caution, Fasten Seat Belt
J	4153197	Caution, Stop The Engine And Remove The Starter Key Before You Pressure Wash The machine.
K.	4164860	Caution, Hydraulic Oil
L.	4181865	Decal, Warning

4.2 INSTRUCTION LABELS EC

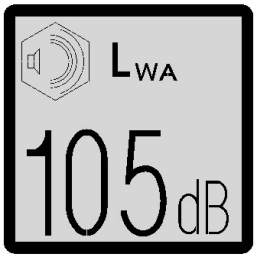

A

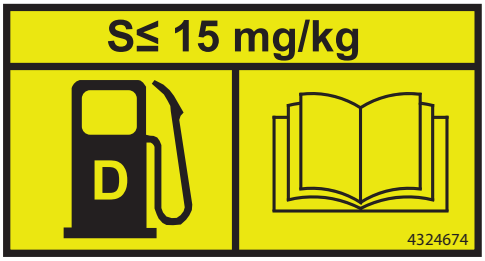

B

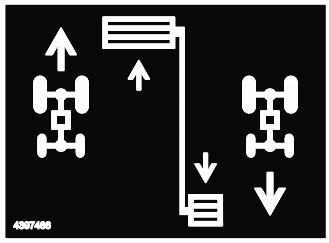

C



D

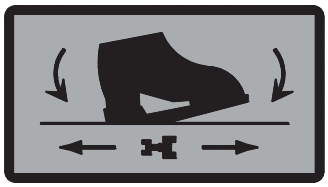

E

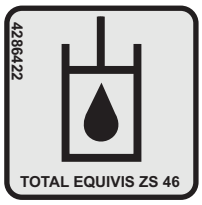

F



G



H



J

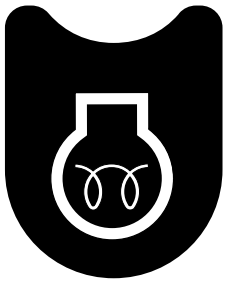

K

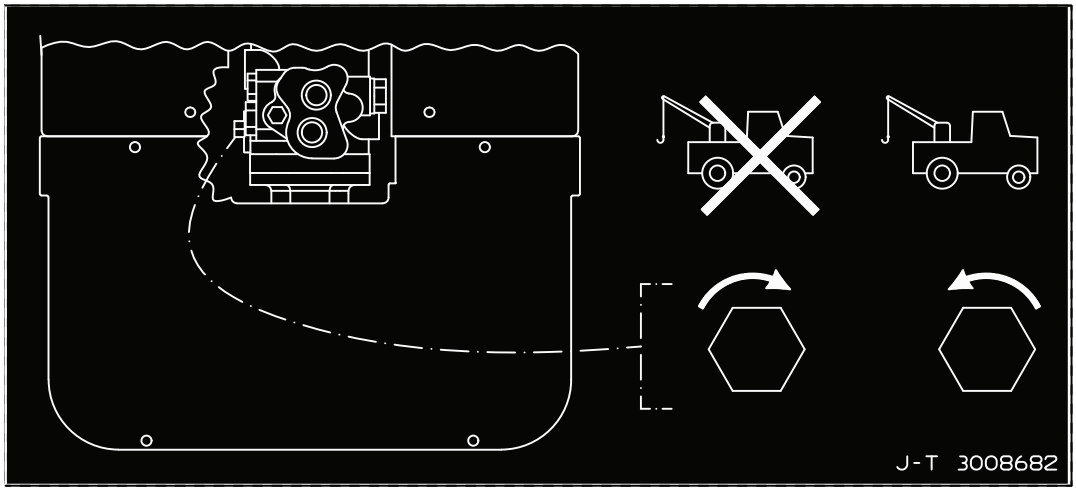

L

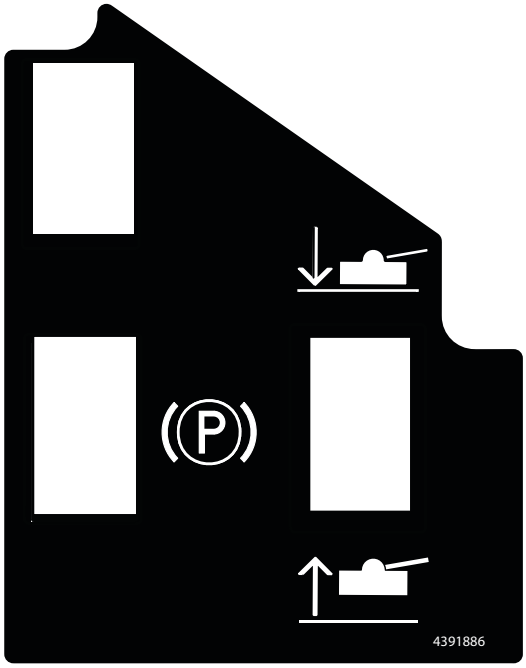

M



N

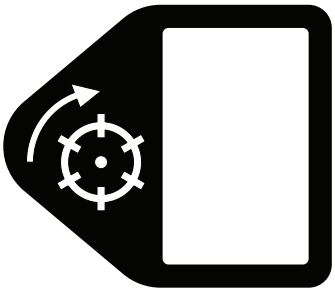

Q

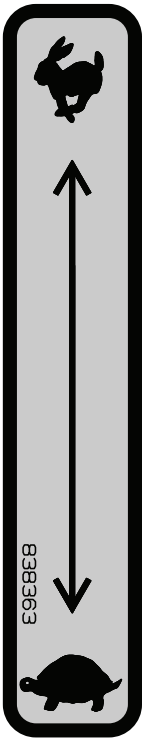

P

Description

A.	009034770	Guaranteed Sound Power Level.
B.	4324674	Diesel Fuel.
C.	4397486	Traction.
D.	673581	Tyre Pressure.
E.	4164861	Forward / Reverse Traction Pedal.
F.	4286422	Hydraulic Fluid.
G.	4397046	Jacking Point.
H.	4164580	Lubrication Point.
J.	4111408	Biofluid.
K.	670526	Glow Plug.
L.	3008682	Tow Valve.
M.	4391886	Control Panel.
N.	4374506	Keyswitch and Light.
P.	838363	Throttle.
Q.	670525	Backlap.

5.1 OPERATOR WORKSTATION

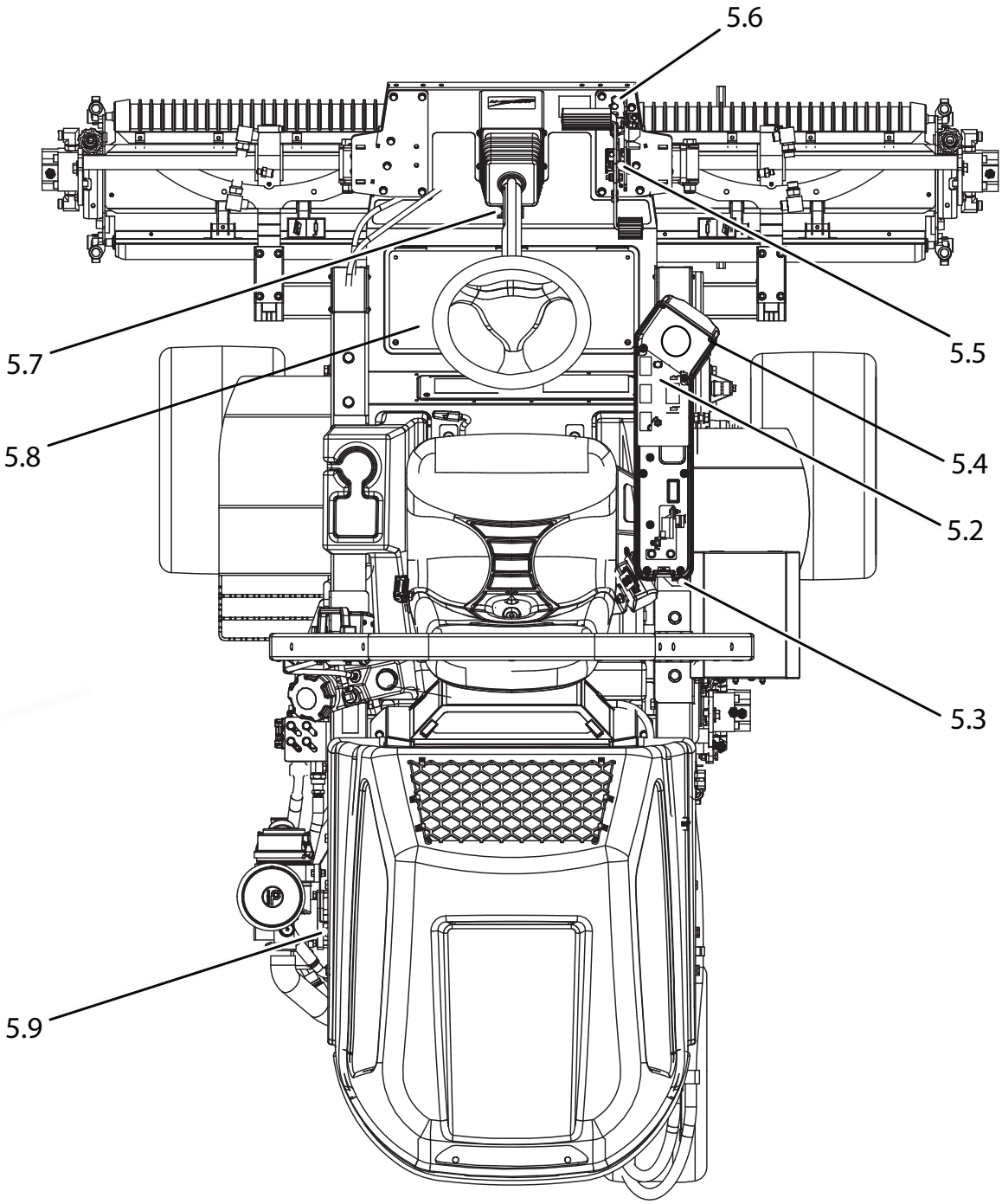

5.2 - Control Panel

5.3 - Throttle Control

5.4 - Armrest Adjuster

5.5 - Traction Pedal

5.6 - Mow Speed Lever

5.7 - Steering Tilt Lever

5.8 - Brake Valve (Under Floorboard)

5.9 - Tow Valve

5.2 CONTROL PANEL

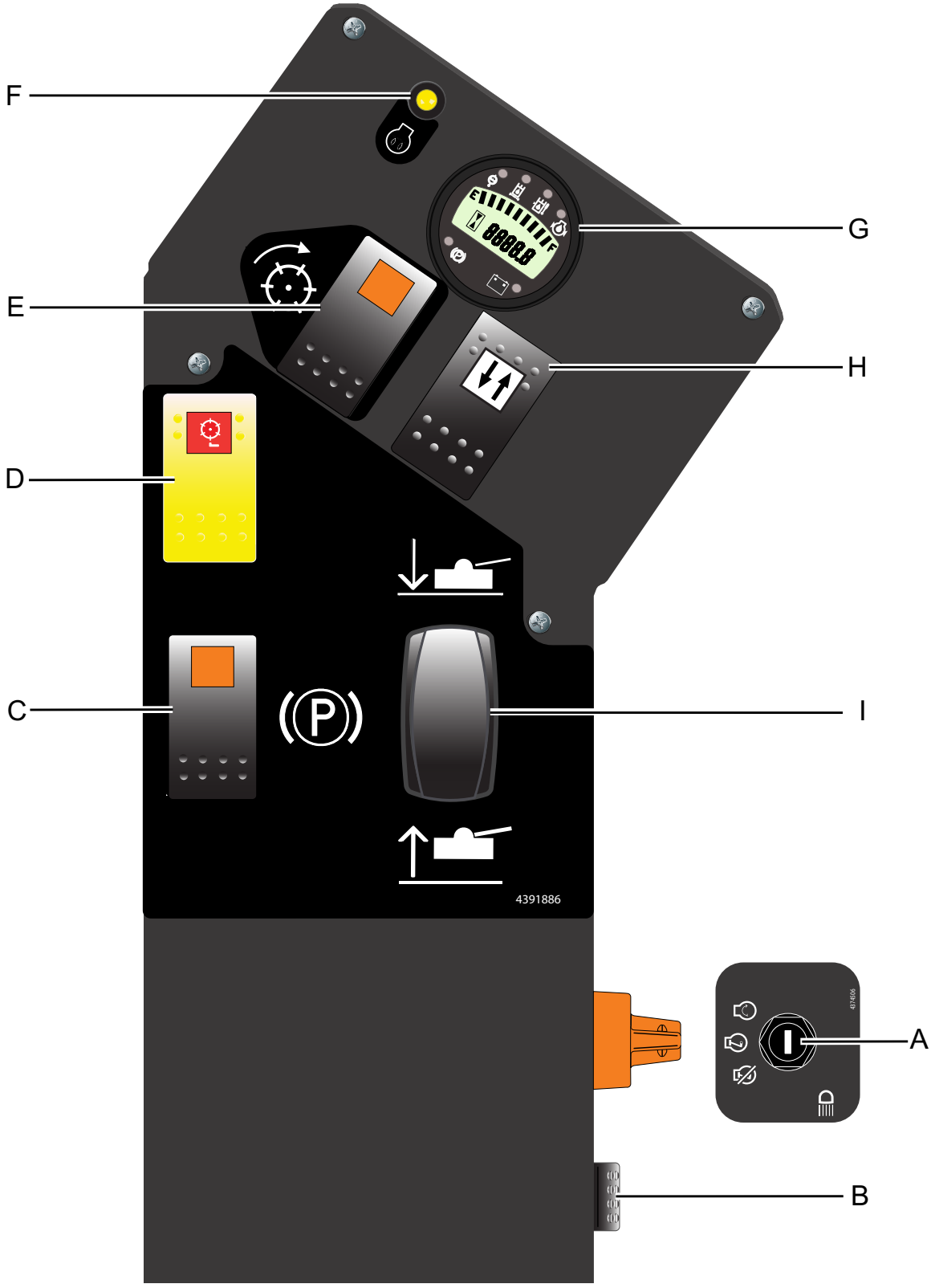

A. Key Switch
B. Light Switch (Optional)
C. Parking Brake Switch
D. Mow Switch
E. Back Lap Switch
F. Glow Plug Indicator
G. Multi Function Gauge
H. Traction Control Switch
I. Lift/Lower Switch

5.2.A KEY SWITCH

Turn the starter key to the “Start Position” to crank the engine. Let go of the key when the engine is running and the key will return to the “Run Position”.

NOTE: The glow plugs operate automatically. The engine will not run from cold until the glow plugs reach their operating temperature.

Turn the starter key to the “Off Position” to turn the engine off.

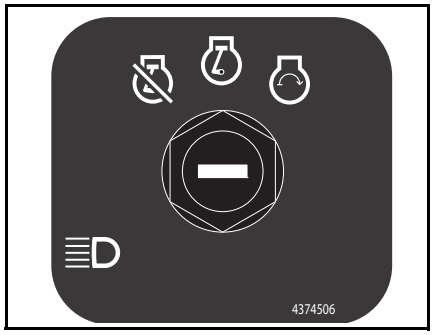

5.2.B LIGHT SWITCH (OPTIONAL)

Turns the work lights “On” and “Off”.

Push the top of the switch to turn the lights ON.

Push the bottom of the switch to turn the lights OFF.

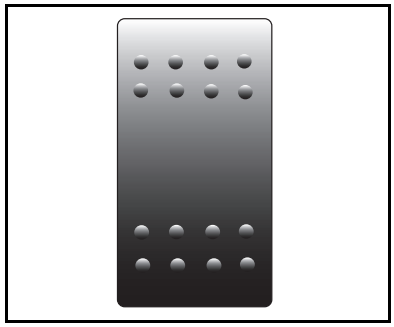

5.2.C PARKING BRAKE SWITCH

Move the orange button to the rear (Towards the Operator) and press the switch to engage the parking brake.

When the engine is stopped, the parking brake engages.

To release the parking brake, press the opposite end of the switch.

DO NOT apply the brake while the machine is being driven.

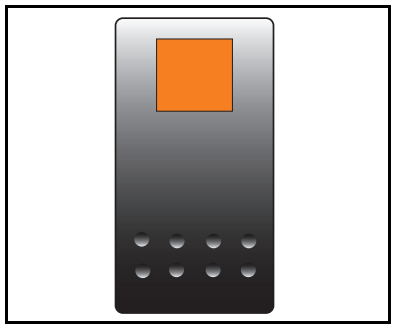

5.2.D MOW SWITCH

The mow switch engages the cutter rotation.

To cut grass, push the front of the “Mow Switch” (Red Lens End) and press the top end of the “Lift/Lower Switch” to lower the cutting units. When engaged the red lens will illuminate.

To stop drive to the cutting units, push the bottom of the rocker switch (Opposite end to the red lens).

Note: When the cutting means is raised above 400mm from the ground or when the operator leaves the seat, blade rotation is stopped.

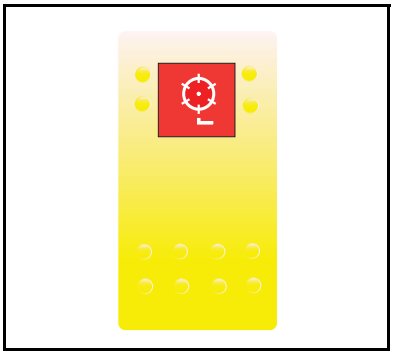

5.2.E BACKLAP SWITCH

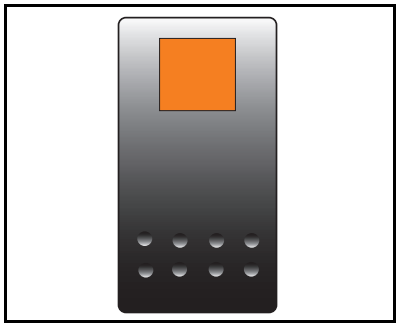

Switches the direction of cylinder rotation to allow backlapping.

By sliding back the orange button on the rocker switch on the control panel and pressing the switch backlap is engaged.
When backlapping is complete return switch to normal operating position and the lock will engage

NOTE: Ensure “Parking Brake” is applied before turning on Backlap.

.

5.2.F GLOWPLUG INDICATOR L.E.D

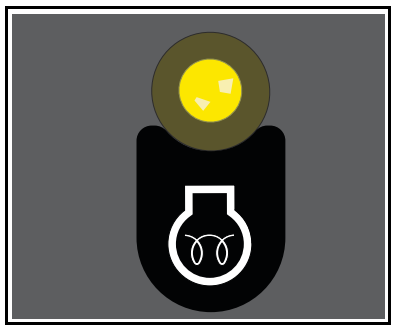

The L.E.D will illuminate when the starter key is turned to the “Start Position” for six seconds whilst the engine pre-heats until the engine is running.

5.2.G.1 MULTI FUNCTION GAUGE

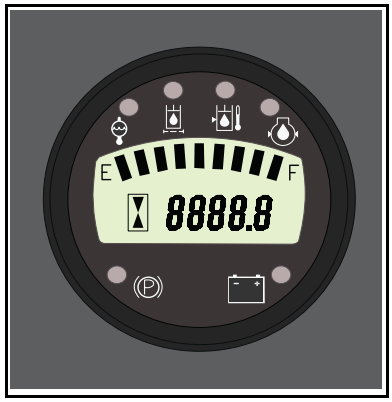

The Multi Function Gauge is activated when the key switch is turned to the “On” position. The features available are listed below.

1. Machine Hours.
2. Blocked Hydraulic Filter.
3. Engine Temperature Warning Lamp.
4. Engine Oil Pressure Warning Lamp.
5. Battery Charge Warning Lamp.
6. Parking Brake.

5.2.G.2 MULTI FUNCTION GAUGE - HYDRAULIC OIL TEMPERATURE

Hydraulic temperature - This feature is unavailable.

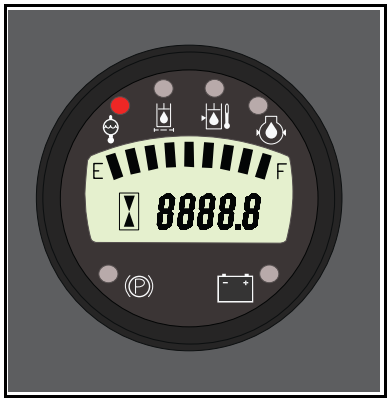

5.2.G.3 MULTI FUNCTION GAUGE - BLOCKED HYDRAULIC FILTER

Hydraulic filter blocked - This feature is unavailable.

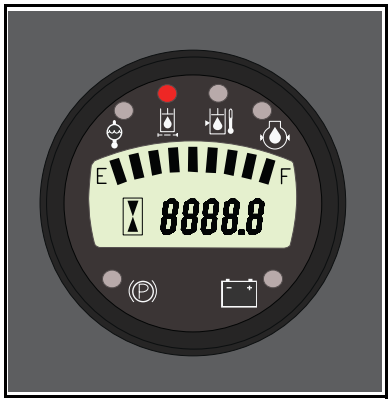

5.2.G.4 MULTI FUNCTION GAUGE - ENGINE TEMPERATURE WARNING LAMP

Colour red, on when the engine coolant temperature reaches a preset level (Note: an audible alarm is also activated).

If the lamp illuminates and alarm sounds bring the machine to a safe stop, disengage the cutting units, apply the parking brake and stop the engine.

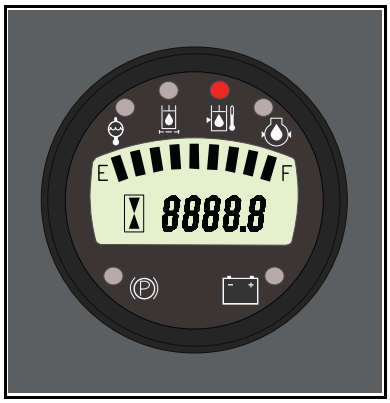

5.2.G.5 MULTI FUNCTION GAUGE - ENGINE OIL PRESSURE WARNING LAMP _____

Colour red, on when the ignition is switched on, and will go out once the engine has started. If the light comes on while the engine is running - **STOP AS QUICKLY AS POSSIBLE AND TURN OFF THE ENGINE,** as this indicates that the engine oil pressure is too low.

Check the level of oil in the sump and top up as necessary. Check the oil pressure sender switch. Continued operation may cause extensive damage to the engine.



5.2.G.6 MULTI FUNCTION GAUGE - CHARGE WARNING LAMP _____

Colour red, on when ignition is switched on and will go out when the engine is started. The light will illuminate when the battery voltage drops below 11.5 Volts for one minute,

If the light comes on while the engine is running, the fan belt may be slipping or broken or a fault within the electrical system is indicated and should be investigated. **STOP IMMEDIATELY.**

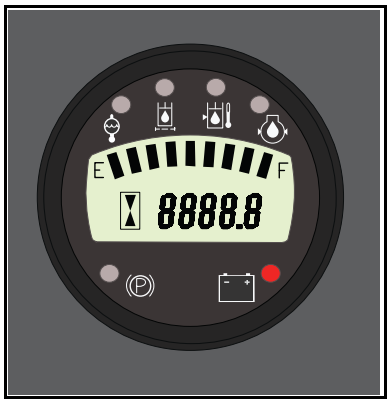

5.2.G.7 MULTI FUNCTION GAUGE - PARKING BRAKE _____

When the engine is running the parking brake is applied by sliding back the orange button on the rocker and pressing the switch on the control panel.

When the engine is switched off the parking brake is automatically applied. To release the parking brake press the opposite end of the rocker switch. **Do NOT apply the brake when the machine is moving.**

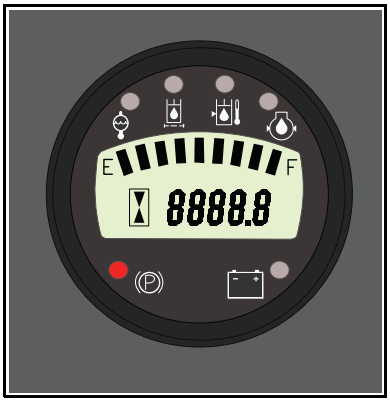

5.2.H WEIGHT TRANSFER SWITCH

This switch allows the operator to transfer weight off the cutting units onto the machine. This gives the machine better traction.

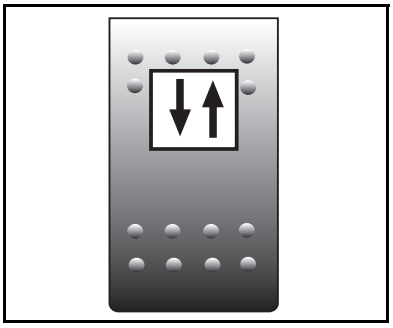

Press the rocker switch to transfer weight off the cutting units, the warning lamp will illuminate. When the switch is in the off position weight is transferred back onto the units, the warning lamp will go out.

Note: The weight transfer comes factory set. If adjustment is required this can be done by using an Allen key to adjust the valve under the left hand side of the foot plate. See section 7.3.

5.2.I LIFT / LOWER SWITCH

The lift/lower switch controls the cutting units lift and lower.

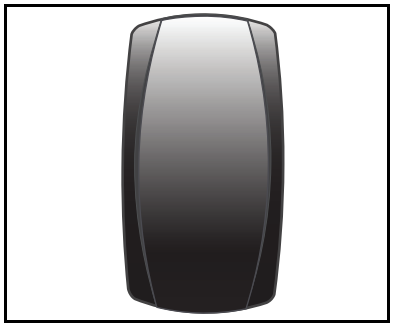

The lift/lower switch operates in Single-Touch mode. Push the top of the lift/lower switch to lower the cutting units or press the bottom of the lift/lower switch to lift the cutting units into cross cut.

To lift the units into the transport position press and hold the bottom of the lift/lower switch.

5.3 THROTTLE LEVER

The throttle lever controls the engine speed. Always operate the mower at full throttle during normal operation.

- Push the throttle lever toward the front of the mower to increase engine speed.
- Pull the throttle lever toward the rear of the mower to decrease engine speed.

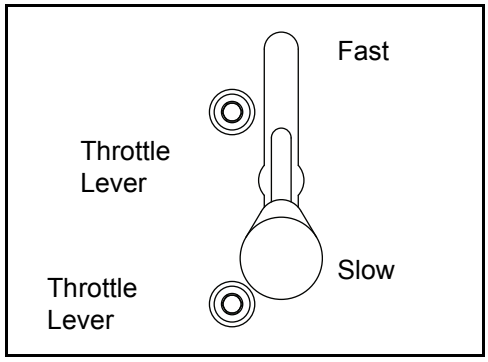

5.4 ARMREST ADJUSTER

The armrest adjuster is found on the right side under the Armrest.

Lift up on the adjuster lever and slide the armrest in the forward or rearward direction. Release the adjuster lever to set the adjustment.

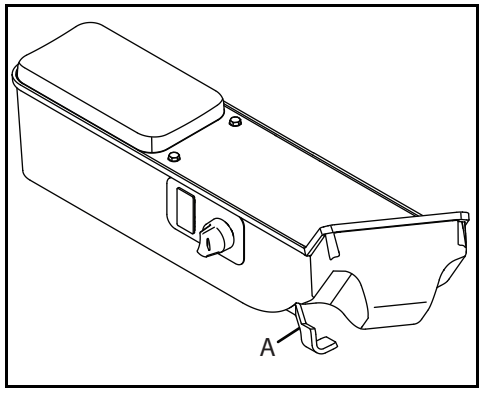

⚠ CAUTION

To prevent injury or property damage, do not adjust the armrest position while the mower is in motion.

5.5 TRACTION PEDAL

The traction pedal is found on the right side of the footplate.

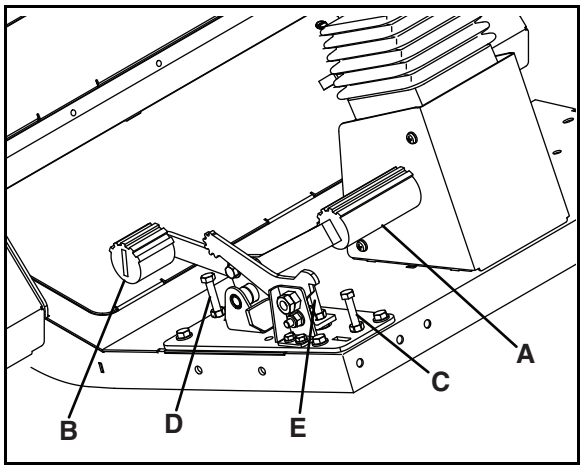

- Carefully press the top (A) of the foot pedal to reach the forward speed that you need.
- To stop - Carefully return the foot pedal to the Neutral position.
- To move in the reverse direction press the bottom (B) of the foot pedal.

There are adjustable stops for the forward transport speed (C) and for the reverse speed (D). When the mow speed lever is in the Mow Position, the pedal will contact the mow speed stop (E).

NOTE: Allow the machine to come to a stop before you engage reverse drive. When the parking brake is applied, DO NOT press the traction pedal.

5.6 MOW SPEED LEVER

The mow speed lever is used to limit the forward speed while mowing.

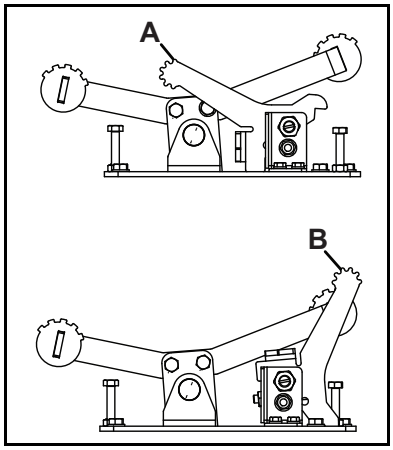

- When you mow, rotate the mow speed stop lever to mow position (A) so the traction pedal contacts the stop when the traction pedal is pressed. The mow speed stop can be adjusted to set specific mow speeds.
- To travel at full speed, rotate the mow speed lever to transport position (B).

5.7 STEERING TILT CONTROL

Put the operators seat in a position that lets you have free use of all the controls.

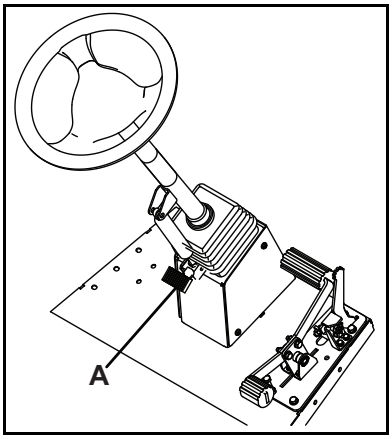

Hold the steering wheel and press the small foot pedal (A) at the base of the steering column.

Tilt the column to a position in which you have a full range of movement and control. Release the small foot pedal to lock the steering column in position.

⚠ CAUTION

To prevent injury or property damage, do not adjust the steering tilt control position while the mower is in motion.

5.8 POWER OUTLET

The Auxiliary Power Outlet is located behind the seat on the left hand ROPS mount.

Used for mobile devices and accessories rated at 12 Volts up to 10 Amps only.

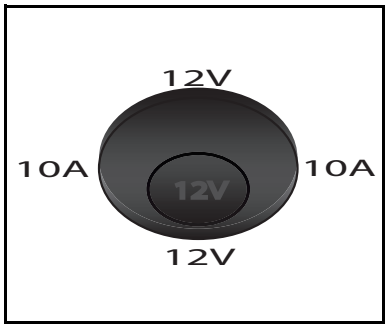

5.9 TOW VALVE

The Tow valve (B) is located underneath the transmission pump (A) between the engine and two section gear pump.

1. To push the machine, disengage the parking brake, see section 5.10.

2. Turn the screw (C) found on the left side of the transmission pump, three complete turns to the left. Set the steering wheel so that the rear wheels toward the front.

3. After pushing the machine, return the parking brake valve, see section 5.10 to its normal position and screw (C) on the pump to its position for operation.

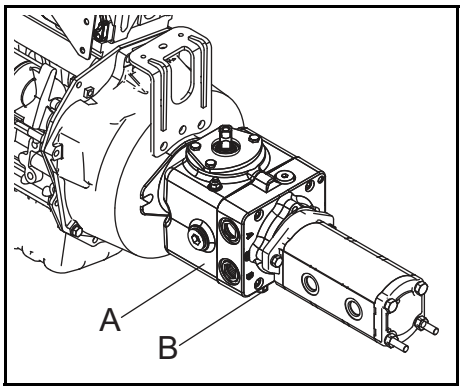

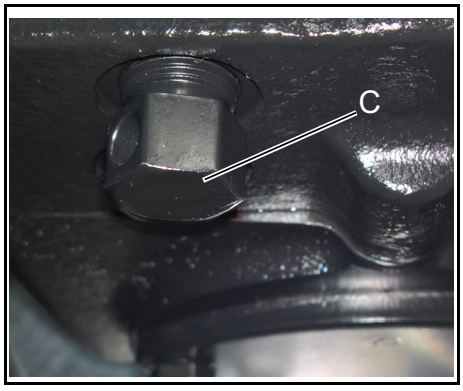

5.10 PARKING BRAKE RELEASE VALVE

The Parking Brake Release Valve is situated under the foot plate, on the left hand side of chassis plate. The Parking Brake Release Valve is used to release the hydraulic brakes when the engine is not in operation.

The Parking brake is released with the hand wheel (A) turned completely to the right (clockwise), after you release lock wheel (B). Use the hand pump (C) to create enough pressure to release the brakes (50 to 60 strokes will give 90 seconds of brake release). When complete, rotate the hand wheel (A) to the left (counter clockwise) completely and lock with wheel (B).

This method of brake release is to recover the vehicle a short distance only and should be carried out on level ground.

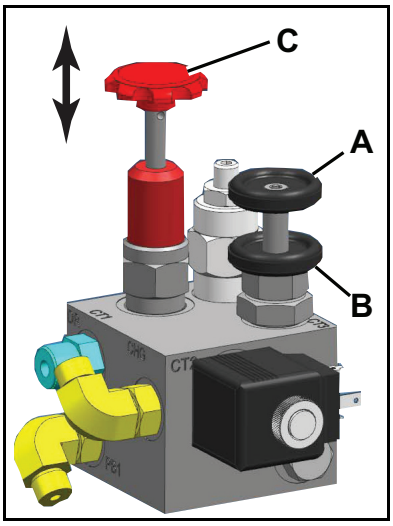

5.11 FUEL GUAGE

The fuel gauge is located behind the left hand ROPS Mount.

Always check daily to ensure that there is sufficient fuel prior to cutting.



6.1 DAILY INSPECTION

⚠ CAUTION

The inspection must be done each day with the engine turned off and while all fluids are cold. Lower the cutter equipment to the ground, engage the parking brake, stop the engine and remove the ignition key.

1. Do a visual inspection of the vehicle and look for indication of wear, loose hardware. Check for any components that are not included on the machine or damaged. Check for fuel and oil leaks to make sure that all connections are tight. Make sure that all hoses and tubes are in good condition.

2. Check the fuel supply, radiator coolant level, crankcase oil level and air cleaner is clean. All fluids must be at the full mark while the engine is cold.

3. Make sure all cutting units are adjusted to the same height of cut.

4. Check all tyres for the correct pressure.

5. Test the Operator Presence And Safety Interlock System.

6.2 OPERATOR PRESENCE AND SAFETY INTERLOCK SYSTEM

1. The Operator Presence And Safety Interlock System will not allow the engine to start unless the operator is sitting in the seat, the parking brake is engaged and the cutter switch is disengaged. The system stops the engine if the operator leaves the seat with the cutters engaged.

⚠ WARNING

Do not operate the equipment with the operator presence and safety interlock system disengaged or while the equipment has defects. Do not disconnect any switch.

2. Do each of the tests as shown below, to make sure that the Operator Presence And Safety Interlock System operates. If any of the tests fail, stop the test and have the system inspected and repaired.

a. The engine does not start during test 1

b. The engine does start during tests 2, 3 and 4

c. The engine continues to run during tests 5 and 6

Refer to the chart below for each test and follow the check marks across the chart. Turn off the engine between each test.

TEST 1: The test shows the normal engine start procedure. The operator is in the seat, parking brake switch is in the ON position, the traction pedal is in the NEUTRAL position and the mow switch is in the OFF position. The engine will start.

TEST 2: The engine must not start if the mow switch is in the ON position.

TEST 3: The engine must not start if the parking brake switch is in the OFF position.

TEST 4: The engine must not start if the traction pedal is out of the NEUTRAL position.

TEST 5: Start the engine with the normal procedure. Turn on the mow switch and lift your weight off the seat. The engine must stop. The cutting unit reels must not rotate after seven (7) seconds.

TEST 6: Start the engine with the normal procedure. Turn off the parking brake switch and lift your weight off the seat. The engine must stop. The cutting unit reels must not rotate after seven (7) seconds.

Test	Operator Seated		mow Switch OFF		Parking Brake Switch ON		Traction Pedal in Neutral		Engine Starts	
	Yes	No	Yes	No	Yes	No	Yes	No	Yes	No
1	✓		✓		✓		✓		✓	
2	✓			✓	✓		✓			✓
3	✓		✓			✓	✓			✓
4	✓		✓		✓			✓		✓
5	✓	H	✓	H	✓		✓		H	
6	✓	H	✓		✓	H	✓		H	

H Start the engine with the normal procedure, move position of the switch and lift your weight off the seat. The engine must stop immediately and the cutting unit reels must not rotate after seven (7) seconds.

6.3 PROCEDURE FOR OPERATION

WARNING

This mower has a Roll Over Protection Structure (ROPS). Always wear the seat belt with the ROPS. If the mower is overturning, hold the steering wheel. Do not try to move off the mower or leave the seat.

CAUTION

To prevent injury, always wear the safety glasses, leather work shoes or boots, a hard hat and ear protection.

1. You must not start the engine without the operator in the seat on the tractor.
2. Do not operate the tractor and attachments with loose or damaged components. All components must be included on the tractor. To get the best results, grass must be cut in dry conditions.
3. First cut in a test area so that you completely understand the operation of the tractor and controls.
4. Inspect the area and find the safest procedure for the vehicle. Check the height of the grass, the type of terrain and the condition of the surface. Each area condition needs the applicable adjustments and precautions.
5. You must not direct the cut material toward persons near the machine. When the vehicle is in operation, do not allow persons to stand near to the machine. The owner/operator is responsible for injuries caused to persons near the machine and any damage to their property.
6. Be careful when you cut surfaces that are near to gravel areas (roadway, parking areas, cart paths). Stones released from the equipment can cause injuries to persons and damage the equipment.

CAUTION

Remove all dangerous material from the area before you cut the grass. Enter a new area carefully and always operate at speeds that allow you to control the mower safely.

7. When you move across the roads or paths, disengage the cutter motors and lift the equipment. Check for the traffic when you drive on the roads.
8. If you hit an obstruction or if the machine has a vibration that is not normal, stop and inspect the equipment for damage immediately. Repair damaged equipment before operation is continued.

CAUTION

Before you clean, adjust or repair this equipment, always disengage all drives and lower all equipment to the ground. Engage the parking brake, stop the engine and remove the key from the ignition switch to prevent injuries.

WARNING

DO NOT USE ON SLOPES MORE THAN 14°

6.4 TO FIT THE CUTTING UNITS TO THE MACHINE

NOTICE

For height of cut adjustments see section 7.2 and 7.3

Cutting Unit Mounting

Front and wing units

1. With the lift arms in the lowered position slide the cutting unit pivot yoke (A) on to the lift arm.
2. Apply a small amount of Shell Darina R2 grease to the front surface of spacer (B), slide the cutting unit pivot yoke (A) onto the pivot shaft.
3. Position the locking collar (C) onto the pivot shaft, align the hole of the locking collar (C) to the hole in the pivot shaft (B), Place washer (D) onto the cap screw (E) and secure in place.

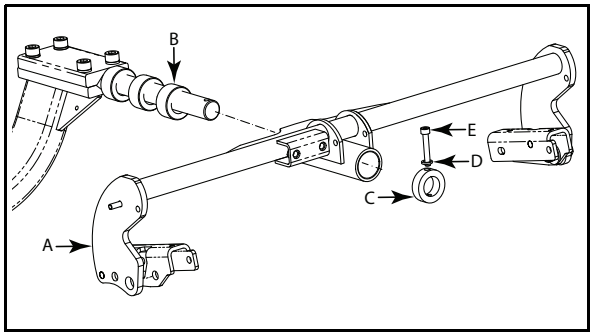

Centre unit

1. Remove the clamp plate and the shaft from the lift arm.
2. Slide shaft (B) through mounting bracket on the cutting unit top deck fitting spacer (D) and locking collar (E) to shaft, fasten with screw and washer (F).
3. Align the cutting unit with shaft fitted with the lift arm.
4. Re-fit the clamp plate holding the shaft to the lift arm.

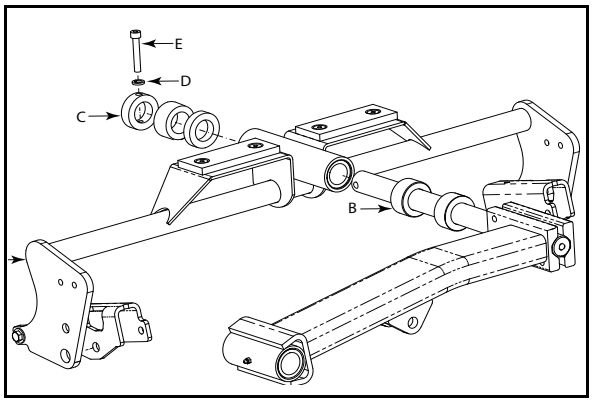

Fitting the hydraulic motor

1. It is important not to contaminate the motor shaft or internal splines of the cutting cylinder. If for any reason they are contaminated, they must be cleaned by degreasing. Liberally lubricate the motor and cylinder splines with Shell Malleus B1 grease (Part no. MBE3927) before assembling.
2. Connect hydraulic motor to cutting unit bearing housing. Secure to studs using nuts and washers.

NOTICE

Always check that the correct number of spacers are installed between the lift arm, and yoke assembly when mounting the cutting units to the machine.

- **Front and wing units MUST have three spacers (B) installed between the lift arm and yoke assembly.**
- **The centre unit MUST have two spacers (B) installed between the lift arm and yoke assembly.**

6.5 OPERATION OF THE MACHINE

1. Check the machine, look for worn, damaged or loose parts. Check the machine for fuel and oil leaks. Make sure that all connections are tight. Make sure that all hoses and tubes are in good condition.
2. Check the fuel level, radiator coolant level, crankcase oil level and air cleaner is clean. When the engine is cold, all additional fluids must be at the full level mark.
3. Make sure all cutting units are adjusted to the same height of cut.
4. Check all tyres for the correct pressure.
5. Test the Operator Presence And Safety Interlock System.

NOTICE

Adjust the seat to make sure all controls are within reach and will operate through the full range of movement.

1. **Set the seat for the operators weight, height and reach.**
2. **Set the seat so that you can see the cutting units and the area around them.**
3. **Set the seat position for distance from the traction pedal. Check you can reach all the controls easily.**
4. **Check the angle of your foot on the traction pedal (see section 5.3).**

6.6 HOW TO START THE ENGINE

The following procedure is for starting cold engines.

1. Ensure the FWD/REV pedal is in the neutral position, the mow switch is off, the throttle setting is in a mid position.
2. Turn the ignition switch fully clockwise and hold until the engine starts (approximately 5-10 sec).
3. The glow plugs are auto timed depending on the coolant temperature for operating the starter motor (This should only take a few seconds).
4. When the engine starts, release the key immediately and it will return to the RUN position.
5. If the engine does not start, return key to the OFF position and try again.

NOTICE

1. **If the engine fails to start after two attempts, wait 20 seconds and try again.**
2. **The starter motor must not be run continuously for longer than 30 seconds or it may fail.**
3. **If the red LED's on the display flash whilst starting one of the safety interlock switches has not been set correctly.**

6.7 HOW TO DRIVE

1. Move the throttle control lever to the FAST position.
2. Release the brake. Make sure the parking brake is completely released before you move in a forward or reverse direction.
3. Forward - Carefully press the top of the Forward / Reverse foot pedal to reach the ground speed that you need.
4. Reverse - Carefully press the bottom of the Forward / Reverse foot pedal to reach the ground speed that you need.
5. To stop - carefully return the Forward / Reverse foot pedal to the neutral position then decrease throttle.
6. To stop the vehicle on a slope it may be necessary to apply traction in the opposite direction to which the machine is trying to roll.

NOTICE

1. **Use complete foot to operate both forward and reverse.**
2. **Always operate the traction pedal carefully. Do not move the pedal from forward to reverse quickly.**

6.8 HOW TO MOW

1. Set the mow / transport speed selector to the mow position, this will set the maximum speed.
2. Lower the cutting units with the joystick.
3. To engage the cutting mechanism, press the lower half of cutting unit switch, found on the control panel.
4. Release the parking brake and drive in a forward direction.

NOTICE

Always set the throttle to maximum engine rpm. To mow when the grass is heavy and the engine can not give enough power, decrease the forward speed.

To remove or install grass catchers:

Set the mow switch in the OFF (Down) position, lower the cutting units to the ground, put the parking brake switch in the ON position and stop the engine.

Release latch and slide grass catcher off or back onto the lift yoke.

6.9 TO STOP THE ENGINE

1. Disengage the drive to the cutting units with the cutting unit switch.
2. Return the forward / reverse foot pedal to the Neutral position.
3. Set the parking brake.
4. Move the throttle control lever to the SLOW position.
5. Turn the ignition key to the OFF position.

6.10 HOW TO REMOVE A BLOCKAGE FROM CUTTING UNITS

⚠ CAUTION

It is important to note: there will be remaining hydraulic pressure within the system that can cause the cutting cylinder to rotate when the obstruction is removed.
Therefore keep your hands, feet and clothing away from cutting units at all times.

1. Disengage the power to the cutting units with the cutting unit switch.
2. When all rotation has stopped, lift the cutting units into the transport position.
3. Move the machine to a flat level surface.
4. Set the parking brake.
5. Move the throttle control lever to the slow position.
6. Turn the ignition key to the OFF position and remove the key.
7. Use the Ransomes Jacobsen “Cutting Unit Tool” part number 4184540, see below or stout stick, put into the cutting cylinder between the blades.

⚠ CAUTION

Make sure correctly selected PPE is worn before you clear the obstruction.



8. Rotate the cylinder with either the “Cutting Unit Tool” or “Stout Stick” until the obstruction has been removed.
9. Inspect all the cutting surfaces for damage, when necessary replace the damaged components.

6.11 BACKLAPPING

⚠ DANGER

Always keep hands and clothing far away from powered reels to prevent severe personal injury.
Never backlap reels with the engine running in an enclosed building.

⚠ CAUTION

Make sure correctly selected PPE is worn before you backlap the reels.

This mower has the ability to allow the cylinders to be driven in reverse direction for backlapping

1. Backlapping is a process which will lightly grind the cylinder to the bottom blade while installed on the mower.
2. If significant amounts of metal are to be removed then the cutting unit must be reground on a special grinding machine.
3. Before any backlapping is done, Ransomes Jacobsen recommends that the backlapping procedure must be risk assessed as a workshop process by the manager of the machine.

4. Backlapping must only be done by approved personnel.
5. Ransomes Jacobsen recommend that grinding paste is only applied to the cylinder when it is stationery, the engine is off and the parking brake applied.
6. When applying grinding paste the cylinder must only be rotated by appropriately sized piece of wood and not by hand.
7. Place cylinders in the most accessible position for applying the paste.
8. After applying the grinding paste the person backlapping must return to the seat, engage the relevant controls and run the cylinders in reverse.
9. When the desired finish is achieved switch off the mower, clean off any surplus paste, reset the cylinder to bottom blade and return the controls to the normal mow positions.

Ransomes Jacobsen grinding paste:

Grinding Paste	Part Number
80 grit grinding paste, 4.5kg tin	5002488
120 grit grinding paste, 4.5kg tin	5002489
80 grit grinding paste, 9kg tin	5002490
120 grit grinding paste, 9kg tin	5002491

PROCEDURE

1. Apply an even coat of grinding paste to the entire length of each blade of the cylinder.
2. Turn the cylinder Speed Control valve to allow cylinders to rotate at their slowest speed.
3. Set the Backlap switch to the Backlap position.
4. Start the engine and set the throttle to maximum engine speed. Switch the cutting unit switch (PTO) to the “ON” position.
5. If necessary adjust the speed control valve until the desired cylinder rotation speed is attained. It must be slow enough so that the cylinder will not throw off the Backlapping compound as it spins.
6. Once all the blades on the cylinder are uniformly sharp, shut off the engine and switch the cutting unit switch (PTO to the off position. Set the Backlap switch to off and close the cylinder Speed Control (all the way clockwise).

NOTICE

To ensure proper cylinder rotation, make sure the cylinder Speed Control has been reset to normal running.

7. Wash all of the grinding paste from all of the heads. Once they are thoroughly cleaned and dry, apply a light film of oil to the cutting edges to help prevent rust.
8. After Backlapping, the cylinder to bottom blade adjustment must be made again.

6.12 TRANSPORTING

1. Start the engine and set the throttle lever to full speed position.
2. Release the parking brake and after ensuring that the pedal control lever is in the transport position, press the upper part of the foot pedal. The machine will move in a forward direction.
3. Continue to push down on the foot pedal until the desired speed of the machine is reached.The foot should always be kept firmly on the pedal to maintain full control of the drive pedal.

6.13 TRANSPORTING ON A TRAILER OR FLATBED

Once the vehicle is loaded onto the trailer or flatbed truck, lower the units down onto the trailer. If the cutting units cannot be lowered onto the trailer, a secondary restraint should be placed around the cutting units when transporting on a trailer or flatbed.

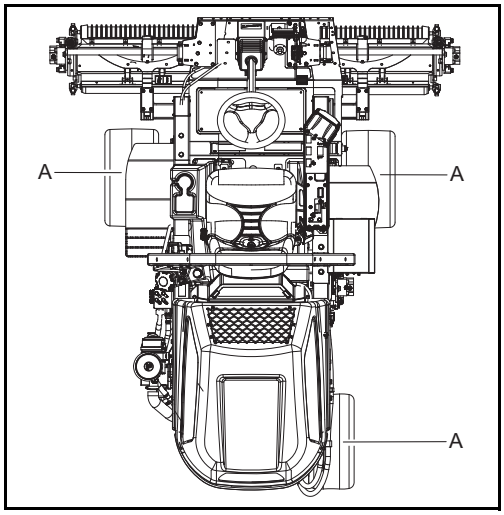

Use straps over the front and rear wheels (A).

Make sure that all tie down straps are tight.

Check the fuel and hydraulic tank caps are tight. Make sure that no part of the mower can fall during transport.

Always follow the given maximum transport load weight for the vehicle used.

Do NOT carry more than the maximum weight shown on the transport vehicle plate.

6.14 JACKING POINT

Slinging

When slinging the mower, damage free clamps must be used, see the illustration, with an approved lift frame. Information is available at www.tipnlift.co.uk.

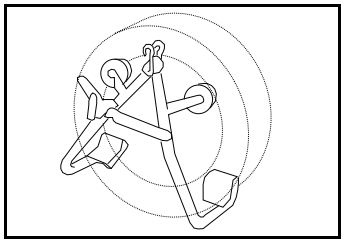

⚠ WARNING

Care should be taken when jacking or slinging machines. Only trained personal should carry out this procedure.

Jacking

The machine jack points indicated by the decal shown.Two for each axle on four wheel vehicles. Other axle types are different, check the Safety and Operations Manual for the safe jack points.

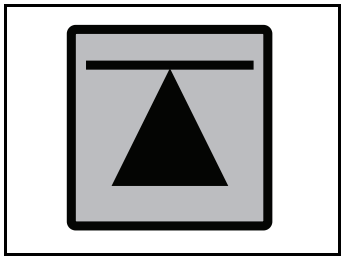

6.15 MOWING ON SLOPES

The mower is assembled for good traction and stability in normal conditions. For operation on wet grass and gradients use caution, vehicle control.will be decreased in these conditions.

⚠ WARNING

The vehicle can turn over in some conditions. The method for the correct operation on the gradients and terraces is:

1. To travel up and down the face of the slope (vertically) but not across the face (horizontally).
2. Do not make a turn that is not necessary.
3.Travel at decreased speeds and look for hazards.

For best stability, always cut with all three units.

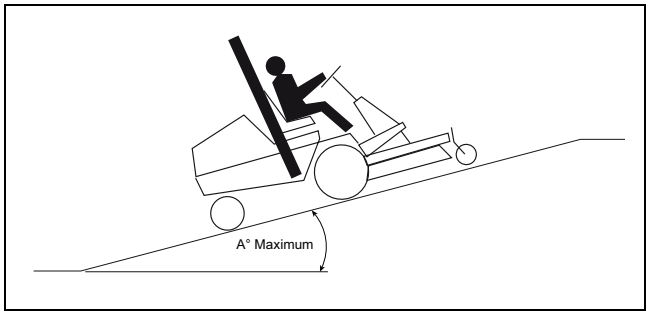

A = Maximum Allowed Slope

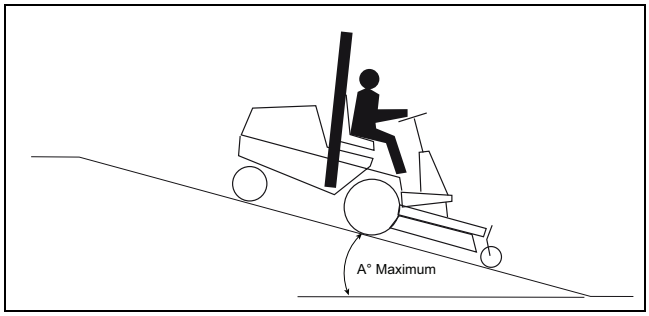

A = Maximum Allowed Slope

1. Always mow with the engine at full throttle, control forward speed with the traction foot pedal.
2. Use the weight transfer control to improve the weight distribution between decks and mower.
3. If traction is lost turn the mower on to a lower gradient.
4. If the mower continues to move or mark the turf, the slope is more than the normal limit.
   Do not try to move toward the top, move backward slowly.
5. When you move across a slope, to keep the vehicle stable lower equipment to the ground.

Correct tyre pressure is necessary for maximum traction. See Specification.

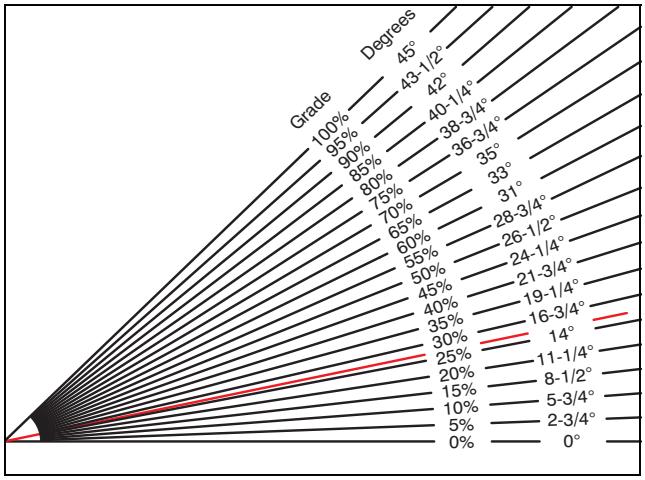

Degrees are shown to the nearest 1/4”.

General slope of roadway embankment - 45°
Steepest grass area - 31°
Slope of average roof - 19-1/4°
2nd class highway maximum grade 4-1/2°
Toll road or freeway - 1-3/4°

⚠ WARNING

When the machine Is driven on the road, use the ROPS Frame and fasten the seat belt.

A Seat Belt and a ROPS is necessary to meet the Machinery Directive 2006/42/EC sections 3.2.2, seating & 3.4.3, rollover.

Ransomes Jacobsen Limited recommends that a local risk assessment Is completed by the owner/user of the machine to find the risks contained in local operation.

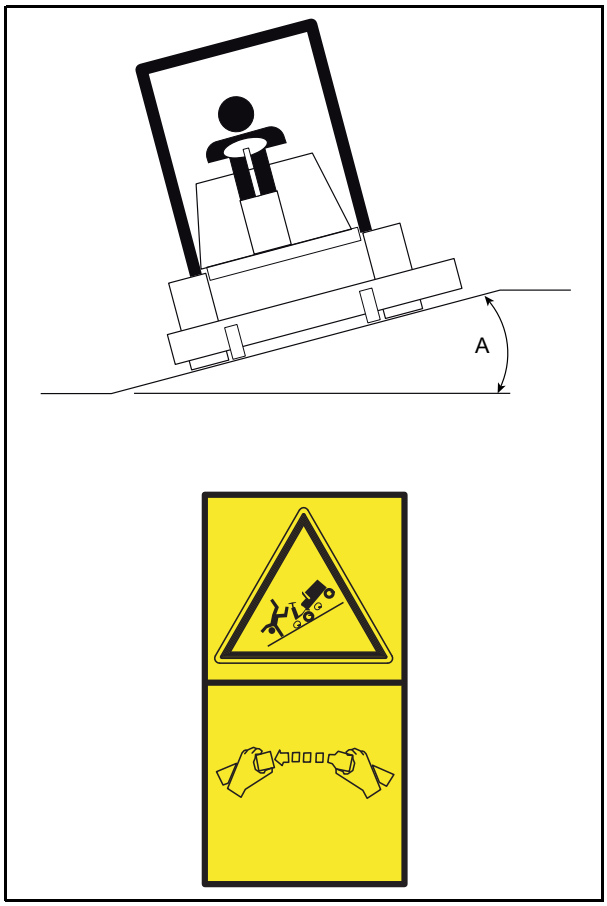

HOW TO CALCULATE A SLOPE

Tools:
Bubble level 1 metre.
Tape measure.

Arrange level (A) horizontally.
Measure the distance (C) with tape measure (B).
Use the chart to find the angle of the ground.

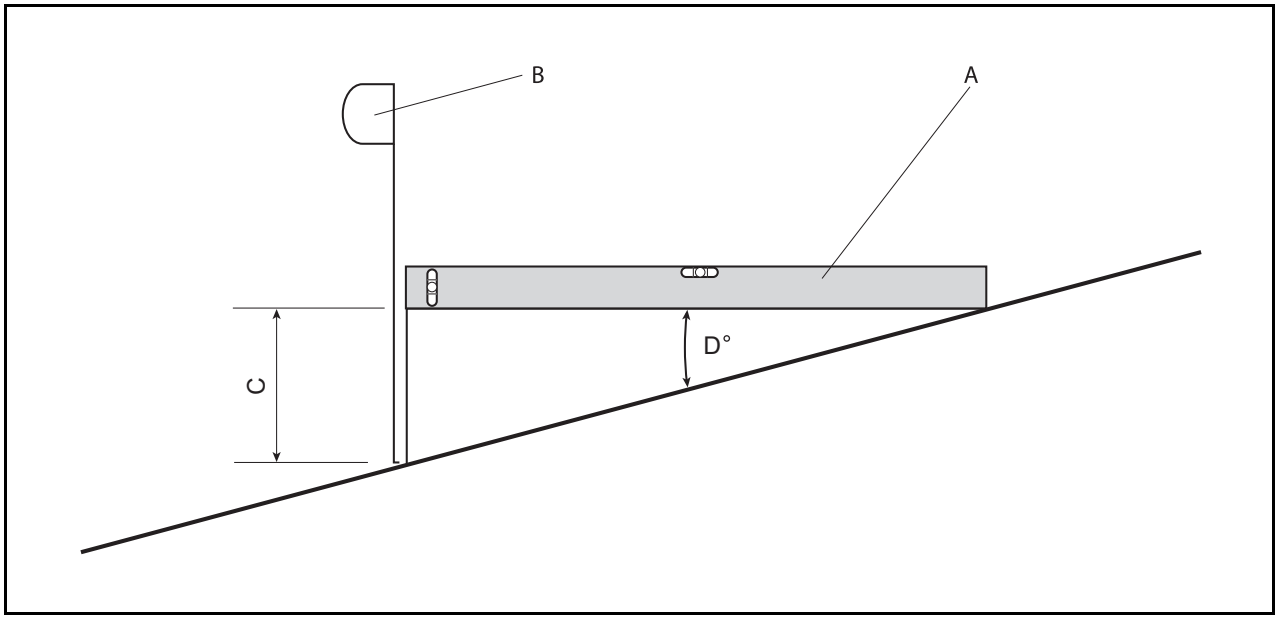

SLOPE CALCULATION CHART

Use Either of these columns but not both		The result of what you are measuring	
Height 'C' in inches measured with a 1 yard horizontal edge 'A'	Height 'C' in millimeters measured with a 1 metre horizontal edge 'A'	Slope Angle 'D' measured in Degrees	Slope Angle 'D' measured in Grade%
3		4.8	8.3
	100	5.7	10.0
	150	8.5	15.0
6		9.5	16.7
	200	11.3	20.0
7.5		11.8	20.8
	225	12.7	22.5
9	250	14.0	25.0
	275	15.4	27.5
10		15.5	27.8
	300	16.7	30.0
11		17.0	30.6
	325	18.0	32.5
12		18.4	33.3
	350	19.3	35.0
13		19.9	36.1
	375	20.6	37.5
14		21.3	38.9
	400	21.8	40.0
15		22.6	41.7
	425	23.0	42.5
16		24.0	44.4
	475	25.4	47.5
18	500	26.6	50.0
20		29.1	55.6
	600	31.0	60.0
25		34.8	69.4
	800	38.7	80.0
30		39.8	83.3
	900	42.0	90.0
36	1000	45.0	100.0

7.1 GENERAL PRECAUTIONS

WARNING

When you clean, adjust or repair this equipment, lower all the cutting units to the ground. Engage the parking brake switch, stop the engine and remove the key. Make sure the mower is parked on a solid and level surface. Never work on the mower, if the mower is only supported by the jack. Always use jack stands.

A trained technician must always do the adjustments and maintenance.

Inspect the equipment according to the maintenance schedule and keep complete records.

1. Keep the equipment clean.
2. Keep all the moving parts correctly adjusted and lubricated.
3. Replace worn or damaged parts before you operate the mower.
4. Keep all fluids at the correct level.
5. Keep the guards in position and all hardware tight.
6. Keep the tyres inflated to the correct pressure.
7. Do not wear jewelry or loose fitting clothing, when you make adjustments or carry out maintenance.

Refer to the illustrations in the Parts Manual for the removal and assembly of parts.

When you discard hazardous materials (batteries, lubricants, fuel, anti-freeze), follow your local, state or federal-recommended procedures.

7.2 TRACTION CONTROL

The LPV transmission pump has a maintenance free drive limiter. If the machine does start to move slowly at The idle speed, do this maintenance.

1. Lift and support the vehicle with all wheels off the ground.
2. Remove the ball-joint A from pump lever B to allow the pump to became neutral.
3. Start the engine, manually move the pump control lever and release to make sure the wheels stop rotating.
4. Where it has been identified that the transmission pump is not returning to neutral, adjust the mechanical neutral (F) within the pump.
5. Operate the foot pedal to make sure the cable is free.
6. Attach the ball joint A to pump lever B.
7. Move the foot pedal through forward and reverse to make sure there is no movement at the idle speed with the drive in the Neutral position.

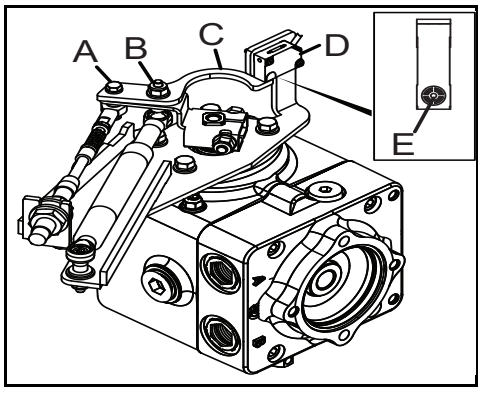

7.3 WEIGHT TRANSFER ADJUSTMENT

The weight transfer bias can be adjusted on the lift valve. The valve is accessible from the front of the machine and is situated under the right hand side of the footplate when facing the machine (left hand side when viewed from the operating position).

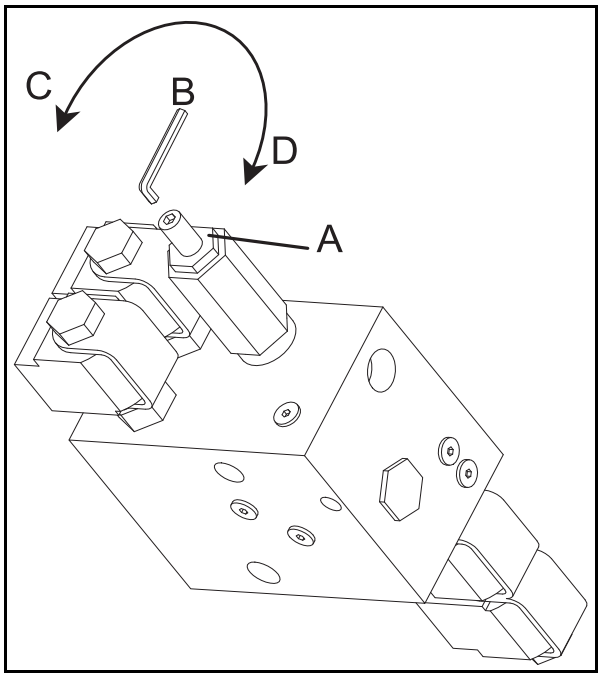

To adjust.

1. Loosen the locknut A. Hold the threaded shaft with the Allen Key B.

2. Use the Allen key B rotate the shaft in the direction D to increase the weight on the drive wheels. To decrease the weight transfer to the drive wheels, rotate the shaft in direction C. When the traction control button is operated on the control pod, the weight distribution you set will engage.
   Use the Weight Transfer to adjust for the cutting unit movement on rough ground and for traction on slopes. To set the Weight Transfer, use 1/4-turn at a time then test the weight transfer.

3. Hold the threaded shaft with the Allen Key B. Tighten the Locknut A.

7.4 ENGINE: FAN BELT

Check And Adjust The Fan Belt

Use the procedure shown to check the belt tension at the centre of the belt between crank shaft and alternator pulleys.

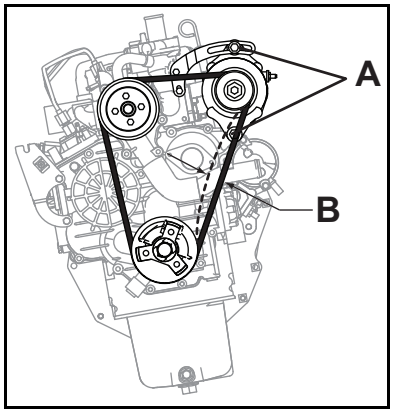

1. Loosen the bolt (A) and the pivot bolt below the alternator.

2. Move the alternator to tighten or loosen the belt. Set a deflection of 7 to 9 mm at the centre (B) with a load 10Kgf (98N/22lbs) for a new belt. Set a deflection of 8 - 10 mm for used belts.

3. Tighten the bolts.

7.5 NEUTRAL SWITCH ADJUSTMENT

The mower has a proximity switch (D) located on the traction pump, which signals the controller when the traction pedal is in the Neutral position. The proximity switch has a red LED to signal when the switch contacts are closed. To adjust the neutral switch:

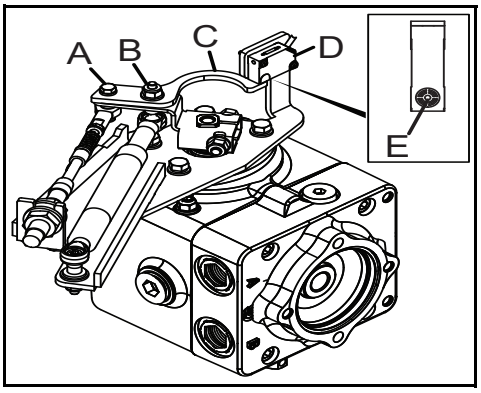

1. Turn the ignition switch to the RUN position to provide power to the neutral switch (D). Do not start the engine.
2. Adjust the neutral switch (D) as required to get an 1/8 to 3/16 in. (0.3 to 0.5 cm) air gap between the switch and the lift arm.
3. Loosen the traction cable hardware (A) and the damper hardware (B). Adjust the bracket (C) until bracket is centred under the sensing portion of the switch (E). The switch contacts will close and the red LED will turn on. Tighten hardware (A and B).

7.6 ARMREST HEIGHT ADJUSTMENT

The armrest has three available height settings and can tilt for the operator.

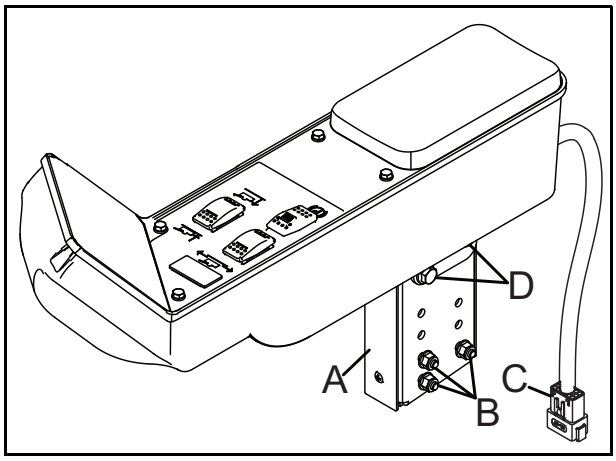

1.Stop the engine and remove the key.

1. Remove the hardware cover (A).
2. Remove the armrest hardware (B) from the bracket on the right side of the seat.
3. Lift or lower the armrest as needed until another set of holes in the armrest bracket align with the seat bracket. Install the armrest hardware (B).
4. To adjust the armrest angle, loosen screws (D) and lift or lower the front of the armrest.
5. After you adjust the armrest, check the armrest wire harness connector (C) for a tight connection to the mower harness.
6. Install the hardware cover (A).

7.1 TRACTION PEDAL STOPS

The traction pedal has three pedal stops to limit the speed of the mower.

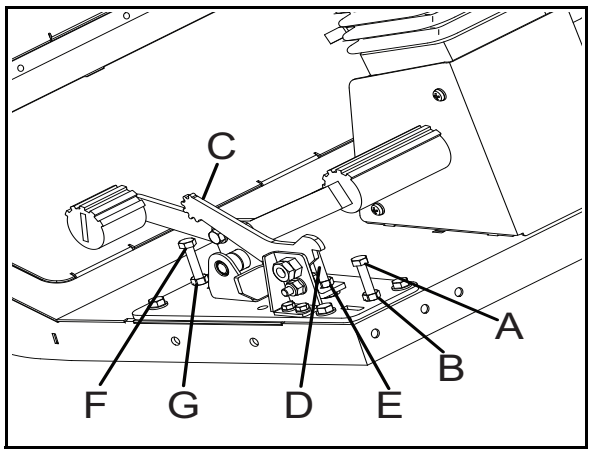

The forward transport speed stop (A) is used to set the maximum transport speed. Make sure the mow speed lever (C) is in the transport position. Loosen nut (B) and adjust the stop to set the desired speed. Tighten the nut.

The forward mow speed stop (D) is used to set the maximum mow speed. Rotate the mow speed lever (C) to the mow position. Loosen nut (E) and adjust the stop to set the desired speed. Tighten the nut.

The reverse speed stop (F) is used to set the maximum reverse transport speed. Loosen nut (G) and adjust the stop to set the desired speed.

7.2 CUTTING UNIT LIMIT SWITCH

The mower has a proximity switch (A), which signals the cutting circuit to turn off the reels. The switch is installed on the mower frame behind the centre lift arm. If the reels continue to rotate when lifted or do not rotate when lowered, inspect the switch. Adjust or replace the switch as required. The proximity switch has a red LED to signal when the switch contacts are closed.

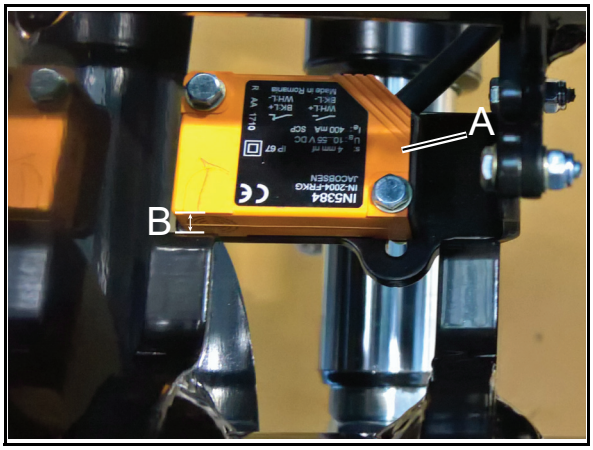

To adjust switch:

1. Park the mower on a flat and level surface.
2. Lower the cutting units.
3. Remove the cutting unit from the centre lift arm.
4. Raise the remaining cutting units into the cross cut position.
5. Remove the access panel from within the operators platform.
6. Turn the ignition switch to the RUN position to activate the electrical system. Do not run the reels or start the engine.
7. Adjust the lift arm switch (A) as required to get an 0.3 to 0.5 cm (1/8 to 3/16 in.) air gap between the switch and the lift arm (B) until the switch contacts close and the red LED turns on. Fasten the switch in this position.
8. Start engine and lower the cutting units to the ground.
9. Install centre cutting unit.
10. Test vehicle and make sure that the reels turn off when lifted above 400 mm.

CUTTING UNITS MODELS - 068093,068094, 068097.

7.7 REEL TO BEDKNIFE

1. Check the reel bearings for end play or radial play. If there is any abnormal movement of the reel, up and down or side to side, adjust or replace components as needed.

⚠ CAUTION

To prevent personal injury and damage to the cutting edges, handle the reel with extreme care.

2. Inspect the reel blades and bedknife to insure good sharp edges without bends or nicks.

a. The cutting edges of the reel blades and bedknife must be sharp, free of burrs, and show no signs of rounding off.

b. The bedknife and bedknife backing must be securely tightened. The bedknife must be straight and sharp.

c. A flat surface of 5/32 in. (4 mm) minimum must be maintained on the front face of the bedknife. Use a standard flat file to dress the bedknife.

3. If wear or damage is beyond the point where the reel or bedknife can be corrected by the lapping process, they must be reground.

4. Proper reel-to-bedknife adjustment is critical. A gap of 0.001 to 0.003 in. (0.025 to 0.076 mm) must be maintained across the entire length of the reel and bedknife.

5. The reel must be parallel to the bedknife. An improperly adjusted reel will lose its sharp edges prematurely and may result in serious damage to the reel and bedknife.

6. Grass conditions will also affect the adjustment.

a. Dry, sparse conditions will require a wider gap to prevent heat buildup and damage to the reel and bedknife.

b. High quality grass with a good moisture content requires a closer gap (near zero).

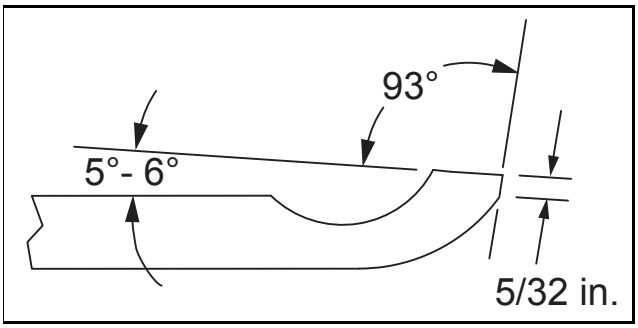

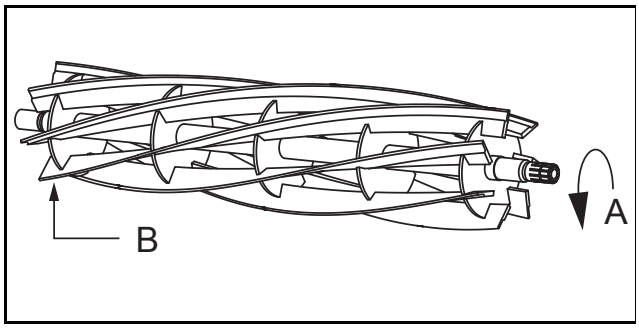

7.8 BEDKNIFE ADJUSTMENT

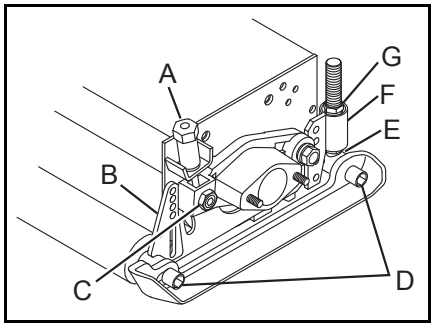

1. Read **Section 5.13** before making the adjustment.
2. Start adjustment at the leading edge of the reel, followed by the trailing end. The leading end of the blade is the end that passes over the bedknife first during normal rotation.
3. Loosen nut (**C**) 1/4 turn on both ends of the cutting unit.
4. Turn adjuster (**A**) in 1/16 to 1/8 turn increments.
5. Slide a feeler gauge or shim stock .001 in. (.025 mm) between the reel blade and the bedknife. Do not turn reel.
6. Adjust the trailing end of the reel in the same manner then recheck the adjustment at the leading end.
7. Tighten all hardware and recheck the adjustment.
8. When properly adjusted, the reel will spin freely, and you should be able to cut a pieces of “reel to bedknife setting paper” (Jacobsen part number 4185600) along the reel.

7.9 CUTTING MODES

1. The mower may be operated in the Fixed Mode or the Floating Mode.
2. Fixed Mode is generally used for cutting heights greater than 1 in. (25 mm) and the mower does not require a front roller unless the terrain is rough and uneven.
3. If a front roller is required, the roller should be raised 1/4 in. (6 mm) higher than the rear roller and used for anti-scalp purposes only.
4. Floating Mode is generally used for cutting heights less than one inch (25 mm) and a front roller is required.
5. If a 2-1/2 in. (63 mm) solid front roller is used, the cutting height will range from 3/8 to 2-1/8 in. (9 to 54 mm).
6. If a 3 in. (76 mm) grooved front roller is used, the cutting height will range from 3/8 to 2-1/4 in. (9 to 57 mm).
7. To convert the mower from Fixed to Floating Mode, remove hardware (**H**) from each side of the three mower frames.
8. Install a front roller and store hardware (**H**) for future conversion to fixed mode.
9. To convert the mower from Floating to Fixed Mode, assemble hardware (**H**) as shown and remove or raise the front roller.

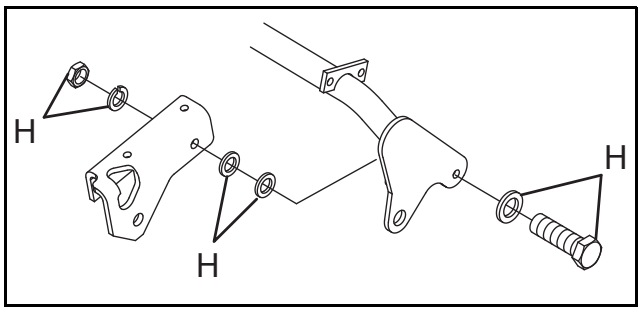

NOTICE

The cutting units of this machine are preset to “Fixed Mode”, to prevent unnecessary movement of the cutting units during transportation of this product.

7.10 CUTTING HEIGHT ADJUSTMENT

1. Raise and lock the lift arms in transport mode.
2. For easier access to the height adjusters on the motor end of the front reels, Jacobsen recommends raising the front end of the mower just a few inches off the ground then, being careful not to damage the hydraulic hoses, tilt the front mowers 90 degrees, and tether the mowers together.
3. On the rear mower (centre) remove the pin and collar on the shaft and slide the mower backwards.
4. Always make the reel-to bedknife adjustment (**Sections 5.13 and 7.12**) **before** making the cutting height adjustment.
5. Select Fixed or Floating Mode and convert the mower accordingly.
6. Loosen skid mounting hardware (**D** - **Figure 5N**) then adjust the cutting height. (A special tool is provided with the mowers. A 5/8 in. socket and ratchet are required).

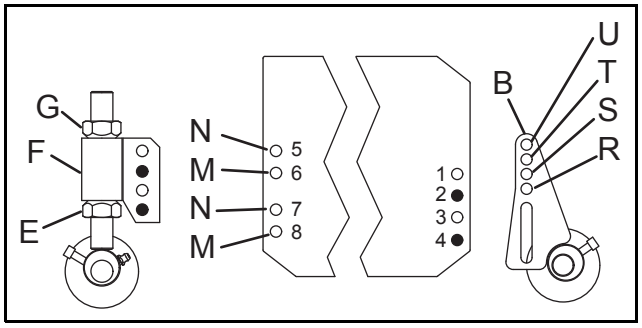

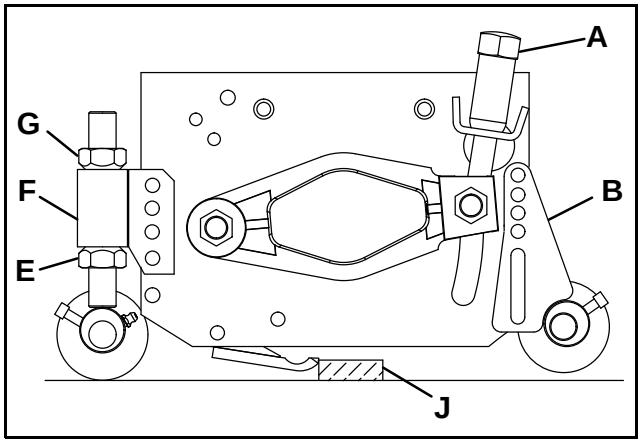

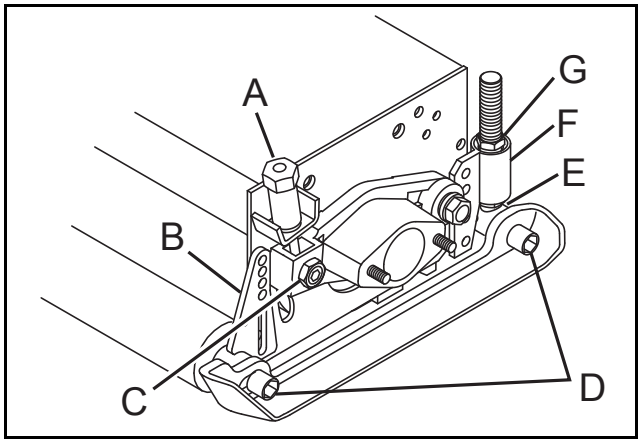

7.11 CUTTING HEIGHT FLOATING

Follow the procedures outlined in Section 7.14.

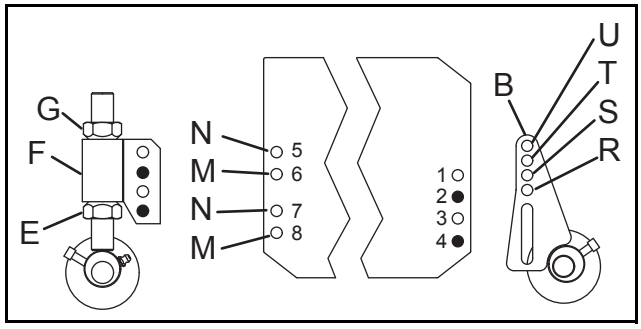

1. Assemble the front roller adjuster (**B**) to holes number 2 and 4 only of the mower frame. Do not use hole numbers 1 and 3. Refer to the chart below for correct hole of front roller adjuster to use.
2. Reposition the rear roller adjusters (**F**).

a. For cutting heights from 3/8 to 1-3/4 in. (9 to 44 mm), use holes (**M**) on the mower frame, and two holes (shown in black) of adjuster (**F**) as shown.

b. For cutting heights greater than 1-3/4 in. (44 mm), disassemble adjuster (**F**) and turn the mounting bracket upside down; then use holes (**N**) of the frame, and the two holes (shown in black) of adjuster (**F**).

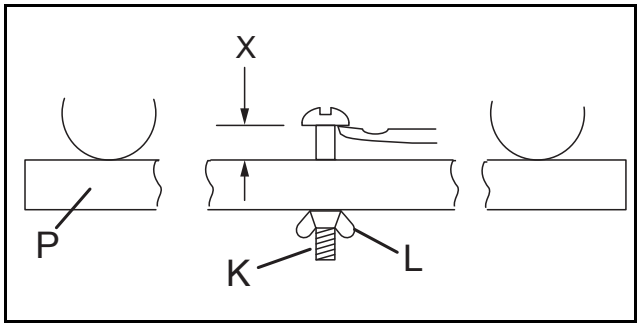

3. Loosen nut (**L**) and adjust screw (**K**) to obtain desired cutting height (**X**) then lock nut (**L**) against gauge (**P**).
4. Place one end of the gauge under the front roller at either end of the reel, and slide the head of screw (**K**) over the bedknife.

a. Adjust nut (**G**) to lower the rear roller to the gauge, then tighten nut (**E**) against the adjuster.

b. Move the gauge to the other end of the reel and repeat Steps 4a and 4b.

Range of Cut					
Grooved Roller		Solid Roller		Front	Rear
Inches	Millimeters	Inches	Millimeters		
3/8 - 3/4	10 - 19	3/8 - 5/8	10 - 16	R	M
3/4 - 1-1/4	19 - 32	5/8 - 1-1/8	16 - 29	S	M
1-1/4 - 1-3/4	32 - 44	1-1/8 - 1-5/8	29 - 41	T	M
1-3/4 - 2-1/4	44 - 57	1-5/8 - 2-1/8	41 - 54	U	N

CUTTING UNITS 673953, 54 & 55, 671604 / 05 & 06 / 673956, 57 & 58

7.12 HEIGHT OF CUT

It is important to set the rear roll parallel to the bedknife in order to achieve the minimum height of cut setting for the three ranges of height, in the three sets of mounting housing (D) bolt holes. Positions 'A','B' &'C'.

Setting the minimum height with the mounting housings (D) in position 'A' will allow minimum height and parallelism to be achieved in each of the other two positions 'B' & 'C'.

Once the range has been chosen the actual height of cut is set by adjusting the front roll only by carriage screw (F) and locknuts (J).

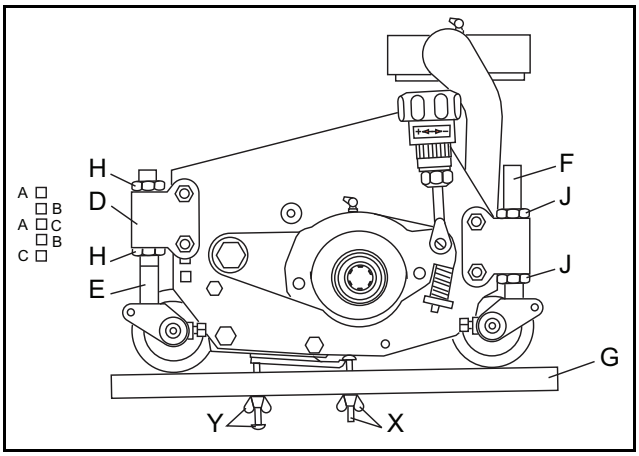

7.13 TO SET REAR ROLL

With a new bedknife

1. Set the height of cut setting bar (G) as follows:

a. Screw X to 12mm(15/32in) under the head.

b. Screw Y to 6.5mm (1/4in) to screw thread tip.

Note: The difference between screw X and screw Y is 0.8mm (1/32”).

2. Set roll carriage mounting housing (D) bolts into holes 'A'.

3. Place the setting bar (G)as shown at one end of the bottom blade with the screw head X over the lip and screw thread Y tip against base of blade.

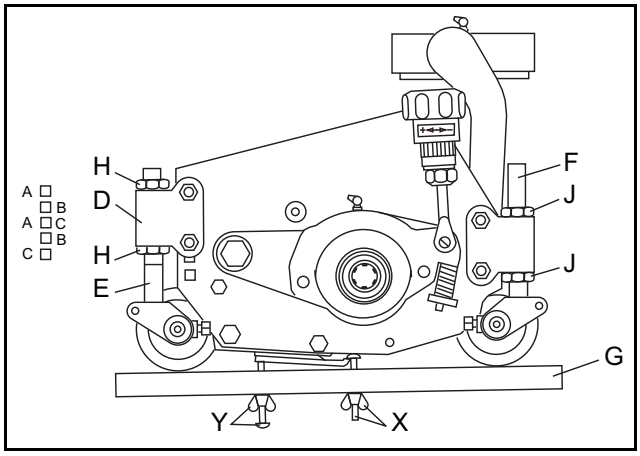

4. Adjust the roll to the setting bar (G) with the two locknuts (H) holding setting bar screws in contact.

5. Repeat for other end of bedknife.

7.14 SET HEIGHT OF CUT

Chose the range of height in which cutting is to be carried out and then adjust front roll only.

1. Preset the height of cut setting bar (G) as follows:

a. Screw X to the required height of cut underthe head.

b. Screw Y is not used.

2. At one end of the bedknife lay setting bar (G) on rear roll with screw head over bedknife lip.

3. Adjust front roll to the setting bar by means of the two front locknuts (J).

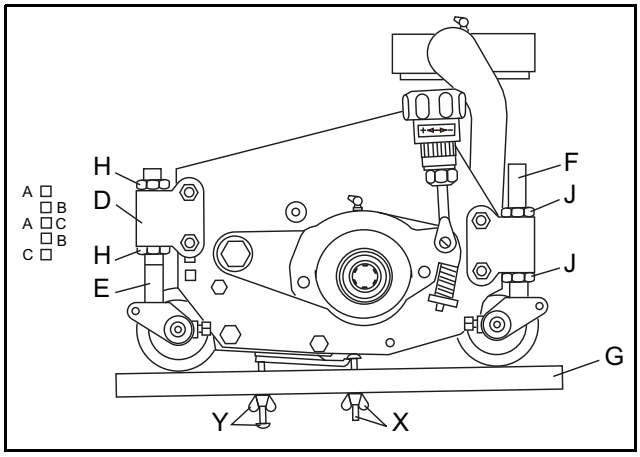

CAUTION

The height of cut range for each set of holes takes into account the requirement of the cutting unit to float. Increasing the maximum height of cut in any of the hole setting ranges could restrict the ability of the cutting unit to float.

Height of Cut Range	Minimum Height of Cut	Maximum Height of Cut
Holes ‘A’	12 mm	19 mm
Holes ‘B’	19 mm	35 mm
Holes ‘C’	27 mm	47 mm

7.15 REEL TO BEDKNIFE ADJUSTMENT

To check that the reel is set to the bedknife correctly, hold a piece of Jacobsen “Reel to bedknife setting paper” between the edge of the blade and the spiral cutters and turn the reel manually.

The paper should be cut cleanly along the total length of the bedknife, if not, some adjustment may be necessary, BUT DO NOT OVERTIGHTEN. Alternatively if the cylinder is worn it may require back lapping before adjusting.

To adjust:

To adjust the reel to the bedknife lift and turn alternately left and right hand handwheels (A) either clockwise to put on cut or anticlockwise to take off cut, and release, keep turning the handwheel until it locates into the serrated locking ring.

The adjuster is of the notched type and each notch is moving the cylinder in increments of approximately 0.04mm (0.0015in).

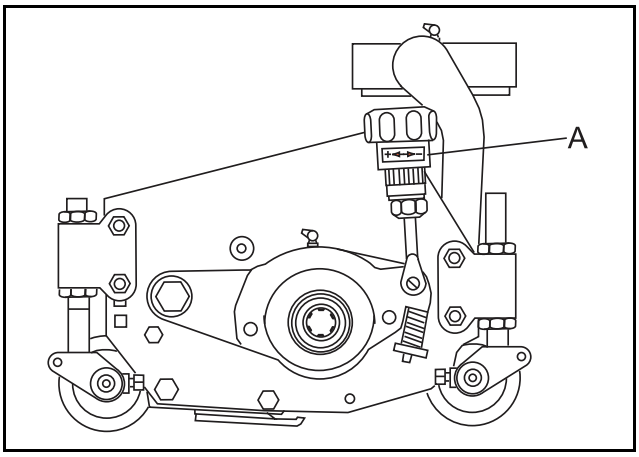

NOTICE

This is a self locking mechanism.

NOTICE

In rough ground conditions it may be necessary to lock the nuts securing the bearing housings to the side frame where they run in adjusting slots to retain reel to bedknife settings.

The nuts should normally be tightened fully and then backed off 1/2 a turn to allow handwheel adjustment without the need to unlock the nuts first.

7.16 SEAT (MILSCO V-2853)

Adjust the seat to the best location based on leg reach.

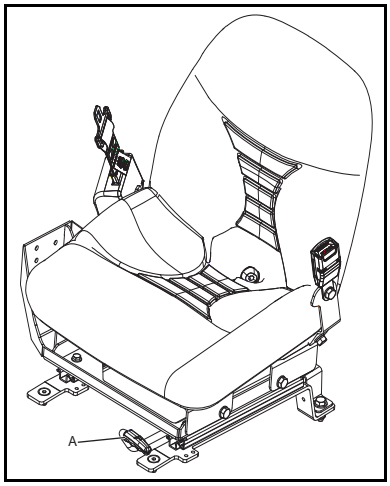

A. FORE AND AFT ADJUSTMENT.

To Adjust.

The adjusting lever is on the left hand side of the seat below the seat cushion (B). By moving the lever upwards, the seat can slide backwards and forwards. When in the desired position release the lever to lock the seat into one of the pre-set positions.

7.17 SEAT (MICHIGAN V-5300)

Adjust the seat to the best location based on leg reach.

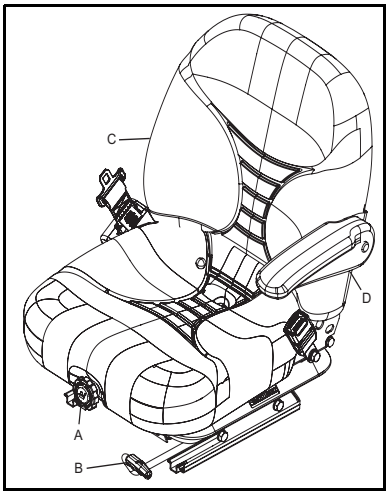

A. ADJUSTMENT FOR OPERATOR WEIGHT

To Adjust.

Whilst standing in front of the machine, rotate knob (A) clockwise or anticlockwise to move the red indicator to the approximate operator weight.

⚠ WARNING

The Operator Weight must be set to the actual weight of the Operator. Safety Systems will be compromised if this is not done.

B. FORE AND AFT ADJUSTMENT.

To Adjust.

The adjusting lever is on the left hand side of the seat below the seat cushion (B). By moving the lever upwards, the seat can slide backwards and forwards. When in the desired position release the lever to lock the seat into one of the pre-set positions.

C. BACKREST ADJUSTMENT.

To Adjust.

Rotate the adjuster (C) clockwise or anticlockwise until a comfortable position is achieved.

D. ARM REST ADJUSTMENT.

To Adjust.

Raise the arm rest to the vertical position and rotate the adjustable stop to achieve a comfortable position.

NOTICE

Adjust the seat to make sure all controls are within reach and will operate through the full range of movement.

1. **Set the seat for the operators weight, height and reach**
2. **Set the seat so that you can see the cutting units and area around them**
3. **Set the seat position for distance from the traction pedal, check that you can reach all the controls**
4. **Check the angle of your foot on the tractions pedal (See section 5.5)**
5. **The seat has a microswitch to sense the operator is in the seat.**

7.18 TORQUE SPECIFICATION

NOTICE

The torque values included in these charts are approximate and are for reference only. Use these torque values at your risk. Ransomes Jacobsen is not responsible for any loss, claim or damage caused by these charts. Always use caution with torque values.

Ransomes Jacobsen uses Grade 5 (Inch) and Grade 8.8 (Metric) Plated bolts, unless a note is given. Always check the marks on the head of the bolts for the bolt grade. For tightening plated bolts, use the value given for lubricated.

SIZE	UNITS	 GRADE 5		 GRADE 8		SIZE	UNITS	 GRADE 5		 GRADE 8	
		Lubricated	**Dry**	**Lubri-cated**	**Dry**			**Lubri-cated**	**Dry**	**Lubri-cated**	**Dry**
#6-32	in-lb (Nm)	–	20 (2.3)	–	–	7/16-14	ft-lb (Nm)	37 (50.1)	50 (67.8)	53 (71.8)	70 (94.9)
#8-32	in-lb (Nm)	–	24 (2.7)	–	30 (3.4)	7/16-20	ft-lb (Nm)	42 (56.9)	55 (74.6)	59 (80.0)	78 (105)
#10-24	in-lb (Nm)	–	35 (4.0)	–	45 (5.1)	1/2-13	ft-lb (Nm)	57 (77.2)	75 (101)	80 (108)	107 (145)
#10-32	in-lb (Nm)	–	40 (4.5)	–	50 (5.7)	1/2-20	ft-lb (Nm)	64 (86.7)	85 (115)	90 (122)	120 (162)
#12-24	in-lb (Nm)	–	50 (5.7)	–	65 (7.3)	9/16-12	ft-lb (Nm)	82 (111)	109 (148)	115 (156)	154 (209)
1/4-20	in-lb (Nm)	75 (8.4)	100 (11.3)	107 (12.1)	143 (16.1)	9/16-18	ft-lb (Nm)	92 (124)	122 (165)	129 (174)	172 (233)
1/4-28	in-lb (Nm)	85 (9.6)	115 (13.0)	120 (13.5)	163 (18.4)	5/8-11	ft-lb (Nm)	113 (153)	151 (204)	159 (215)	211 (286)
5/16-18	in-lb (Nm)	157 (17.7)	210 (23.7)	220 (24.8)	305 (34.4)	5/8-18	ft-lb (Nm)	128 (173)	170 (230)	180 (244)	240 (325)
5/16-24	in-lb (Nm)	173 (19.5)	230 (26.0)	245 (27.6)	325 (36.7)	3/4-10	ft-lb (Nm)	200 (271)	266 (360)	282 (382)	376 (509)
3/8-16	ft-lb (Nm)	23 (31.1)	31 (42.0)	32 (43.3)	44 (59.6)	3/4-16	ft-lb (Nm)	223 (302)	298 404	315 (427)	420 (569)
3/8-24	ft-lb (Nm)	26 (35.2)	35 (47.4)	37 (50.1)	50 (67.8)	7/8-14	ft-lb (Nm)	355 (481)	473 (641)	500 (678)	668 (905)

SIZE	UNITS	 4.6		 8.8		 10.9		 12.9		Non Critical Fasteners into Aluminum
		Lubri-cated	**Dry**	**Lubri-cated**	**Dry**	**Lubricated**	**Dry**	**Lubricated**	**Dry**	
M4	Nm (in-lb)	–	–	–	–	–	–	3.83 (34)	5.11 (45)	2.0 (18)
M5	Nm (in-lb)	1.80 (16)	2.40 (21)	4.63 (41)	6.18 (54)	6.63 (59)	8.84 (78)	7.75 (68)	10.3 (910	4.0 (35)
M6	Nm (in-lb)	3.05 (27)	4.07 (36)	7.87 (69)	10.5 (93)	11.3 (102)	15.0 (133)	13.2 (117)	17.6 (156)	6.8 (60)
M8	Nm (in-lb)	7.41 (65)	9.98 (88)	19.1 (69)	25.5 (226)	27.3 (241)	36.5 (323)	32.0 (283)	42.6 (377)	17.0 (150)
M10	Nm (ft-lb)	14.7 (11)	19.6 (14)	37.8 (29)	50.5 (37)	54.1 (40)	72.2 (53)	63.3 (46)	84.4 (62)	33.9 (25)
M12	Nm (ft-lb)	25.6 (19)	34.1 (25)	66.0 (48)	88.0 (65)	94.5 (70)	125 (92)	110 (81)	147 (108)	61.0 (45)
M14	Nm (ft-lb)	40.8 (30)	54.3 (40)	105 (77)	140 (103)	150 (110)	200 (147)	175 (129)	234 (172)	94.9 (70)

NOTES

8.1 MAINTENANCE AND LUBRICATION CHARTS

SERVICE INTERVAL CHART				
Interval	**Item**	**Section**		
First 50 hours	• Change the engine oil • Change the engine oil filter • Change the hydraulic filter elements	8.2 8.2 8.5		@
Every 8 hours or daily	• Check safety interlock system • Check engine oil level • Check engine coolant Level • Check air filter service indicator • Check the hydraulic fluid level • Check the fuel level • Check tyre pressure • Check engine bay for dirt • Clean radiator screens	6.2 8.2 8.3 8.6 8.8 8.1/8.18		
Every 50 hours or weekly	• Check for loose components • Check for hydraulic leaks • Check tyre pressures	8.1 8.1		
Every 100 hours	• Check alternator belt tension • Clean the fuel filter	8.4 8.9	*1	@
Every 200 hours	• Change engine oil filter • Check air intake	8.2 8.11		@
Every 400 hours	• Change air filter	8.11		@
Every 500 hours	• Clean water jacket (radiator interior) • Replace fan belt	8.4		
Every year	• Replace fuel filter element • Change air cleaner element • Check battery condition • Change hydraulic oil and filter	8.9 8.11 8.16 8.5/8.6	*2	@
Every 800 hours	• Check valve clearance		*3	@
Every 1500 hours	• Check fuel injection nozzle, injection pressure		*3	@
Every 3000 hours	• Check injection pump		*3	@
Every two years	• Replace radiator hoses and clamps • Replace fuel pipes and clamps • Change radiator coolant • Replace air intake hoses		*3 *4	@ @

Items identified by @ are emission control parts. Kubota U.S.A. label these parts in compliance with EPA non-road emission regulation. The owner is responsible for the emissions of the vehicle and for the engine maintenance schedule.
Read the engine warranty statement.
After the first 50 hours of use, items identified must be completed.
*1 Clean the air filter every 25 hours in dirty environments
*2 After cleaning
*3 Contact your local Kubota dealer for this service.
*4 Replace any damaged or worn parts.

Lubricate these fittings every week
A = Front lift arm pivots C = Centre lift arm pivot D = Cutting unit mounting pivot
E = Bearing housing lubrication F = Roll lubrication

Fluid Requirements				
	Quantity			Type
Engine Oil (with filter)	5.1 liters	1.12 Imp gals	1 US gals	10-30W (see specification below)
Hydraulic Oil (with filter)	40 liters	6.4 Imp gals	10 US gals	Total Equivis ZS46 (ISO VG 46)
Radiator Coolant	7.6 liters	1.67 Imp gals	2.0 US gals	50% Anti-Freeze
Fuel	28.7 liters	6 Imp gals	7 US gals	Diesel to BS EN590 or ASTM D975 (“Ultra Low Sulphur”)

Engine Oil: Must meet A.P.I. standard CJ or higher	
TEMPERATURE	**VISCOSITY**
More Than 25°C (77°F)	SAE30, SAE10W-30, SAE10W-40
0°C to 25°C (32°F to 77°F)	SAE20, SAE10W-30, SAE10W-40
Less Than 0°C (32°F)	SAE10W, SAE10W-30, SAE10W-40

Tyre Pressure						
Product	**Front Wheel**			**Rear Wheel**		
	Tyre Size	**Tyre Type**	**Tyre Pressure**	**Tyre Size**	**Tyre Type**	**Tyre Pressure**
3WD, Treaded Tire Option	22 x 12.00 - 12	Grassmaster 4pr	Minimum 0.7 bar (10 psi) Maximum 1.37 bar (20 psi)	22 x 12.00 - 12	Grassmaster 4pr	Minimum 0.7 bar (10 psi) Maximum 1.37 bar (20 psi)
3WD, Smooth Tire Option	22 x 12.00 - 12	Smooth 4pr	Minimum 0.7 bar (10 psi) Maximum 1.37 bar (20 psi)	22 x 12.00 - 12	Smooth 4pr	Minimum 0.7 bar (10 psi) Maximum 1.37 bar (20 psi)

Lubrication Points (Grease Every 50 Hours)	
A. Tie Rod Ball Joints (1).	D. Yoke Pivot Assembly (3).
B. Steering Cylinder Ball Joints (1).	E. Front Roller (6).
C. Lift Arm Pivot (3).	F. Rear Roller Adjuster (3).

SERVICE INTERVAL CHART 068093 / 098094 / 068097				
Interval	**Item**	**Section**		
First 50 hours	**• Yoke pivots • Front roll bearings • Rear roller adjusters**	**8.14**		
Every 40 hours	**• Levers, pivot points any friction points**	**8.14**		

SERVICE INTERVAL CHART 673953, 54 & 55 / 671604, 05 & 06 / 673956, 57 & 58				
Interval	**Item**	**Section**		
First 25 hours	**• Reel bearings • Unit pivot • Roll bearings • Handwheel adjuster**	**8.13**		
Every 400 hours	**• Motor and drive couplings**	**8.13**		

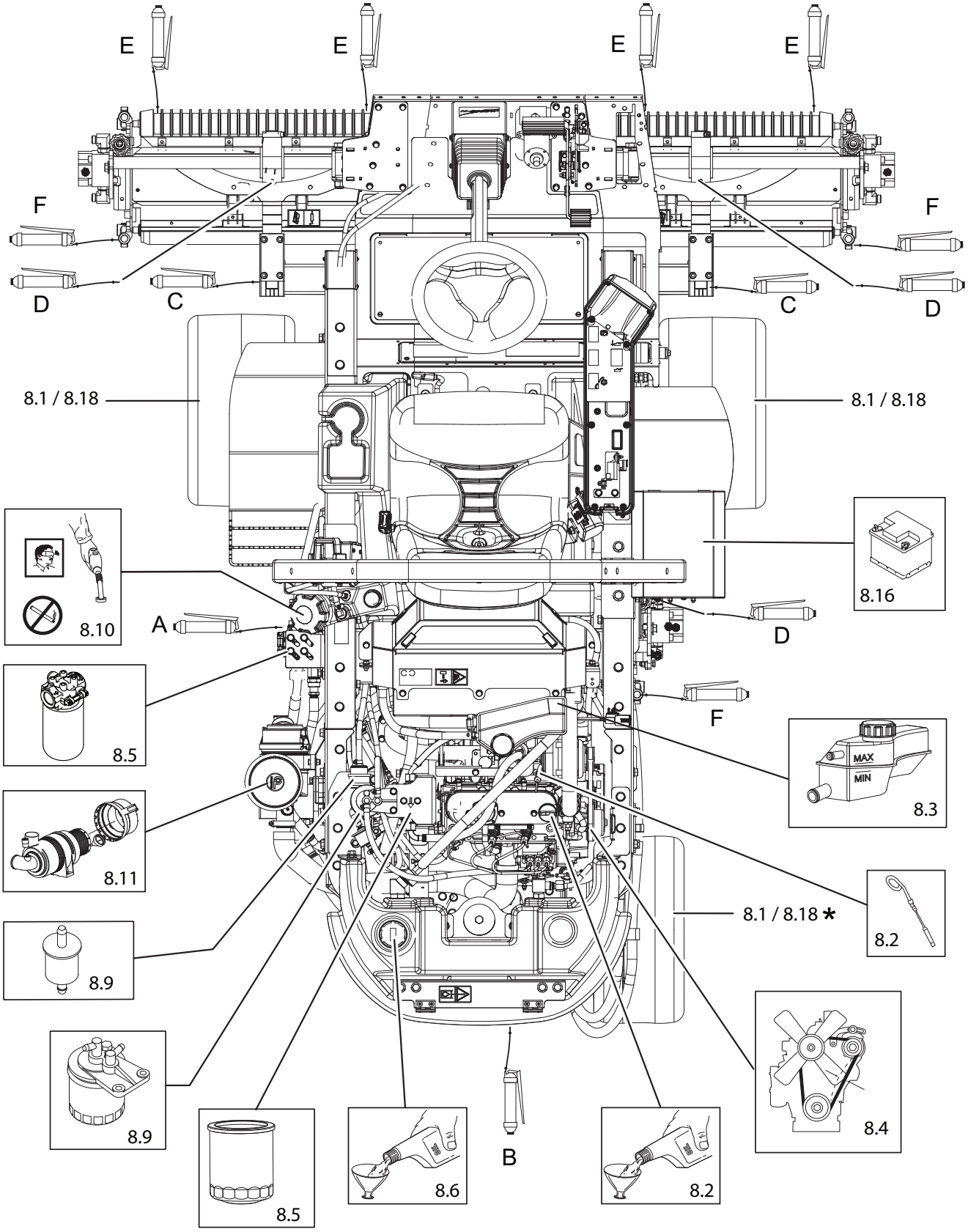

* Rear wheel position moved for clarity.

8.1 GENERAL PRECAUTIONS

⚠ WARNING

Before you clean, adjust or repair this equipment, ensure the cutter switch is in the OFF position. Lower all the cutting units to the ground, apply the parking brake, stop the engine and remove the key.

Make sure the mower is parked on a solid and level surface. Never work on the mower that is only held by a jack. Always use the jack stands.

A qualified technician must do any adjustment and all maintenance. If the correct adjustments can not be made, contact your Ransomes Jacobsen Dealer.

Inspect the equipment according to the maintenance schedule and keep complete records for warranty purposes.

1. Keep the equipment clean.
2. Keep all moving parts correctly adjusted and lubricated.
3. Replace worn or damaged parts before you operate the mower.
4. Keep all fluids at the correct level.
5. Keep the shields in position and all hardware tight.
6. Keep the tyres inflated to the recommended pressure.

When you do any maintenance, do not wear jewelry or loose fitting clothing.

Refer to the illustrations in the Parts Manual for the removal and assembly of parts.

When you discard hazardous materials (batteries, lubricants, fuel, anti-freeze), follow your local, recommended procedures.

NOTICE

Only use the tool attached to the key ring to open the engine hood catches.

8.2 ENGINE

IMPORTANT - An engine manual, prepared by the engine manufacturer, is either included with the mower or is available on our website. Read this engine manual to understand the operation and maintenance of the engine. When you follow the engine manufacturer instructions, you will make sure of the maximum service life of the engine. The replacement engine manuals are available from the engine manufacturer.

During the first 50 hours of operation, Jacobsen recommends the following.

1 Allow the engine to reach a temperature of at least 60° C (140° F) before operation at full load.

2 Check the engine oil level two times each day. Higher than normal oil use can occur during the first 50 hours.

3 Change the engine oil and oil filter after the first 50 hours of operation.

4 Check the alternator belt.

5 Refer to the Engine manual for specified maintenance intervals.If the injection pump, injectors or the fuel system need service, contact your Jacobsen Dealer.

NOTICE

The mower operates and cuts correctly at the preset governor setting.
Do not change the engine governor setting or run at more than safe engine turns.

Check Engine Oil Level

Check the engine oil level before you start or at least five minutes after you stop the engine.

1. Park the machine on level ground, remove the dipstick (A), clean with a cloth and replace in position.
2. Remove the dipstick (A) again and check the oil level. The oil must be between the two level indicators (B) on the dipstick.

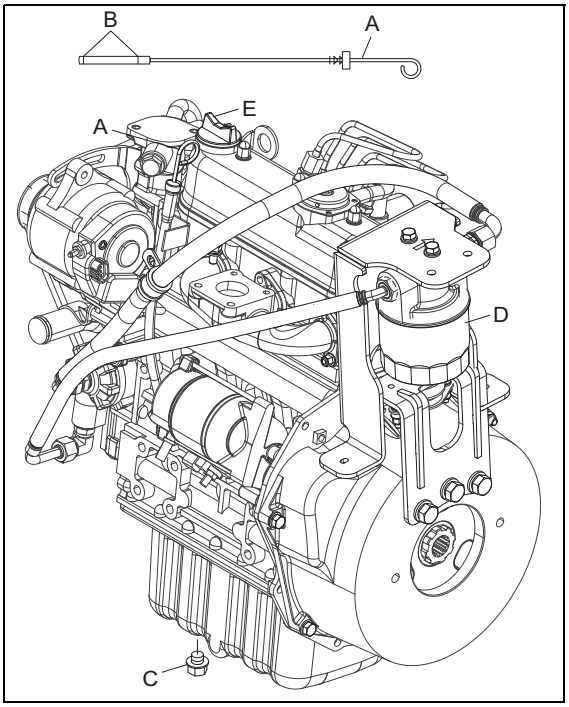

Change Engine Oil

1. Start the engine to increase the temperature, then turn off the engine. Remove the oil drain plug (C) from the bottom of the crankcase and clean with a cloth.
2. Drain the engine oil into a container.
3. Replace the drain plug (C) and fill the engine with the correct quantity and grade of oil through the filler (E).

Change Engine Oil Filter

1. Remove the oil filter cartridge (D).
2. Let the engine oil flow into a container.
3. Clean area on the crankcase.
4. Apply a thin layer of oil to cartridge gasket before you install the filter.
5. Only use your hand to tighten the filter cartridge (D).
6. Check for oil leaks around the cartridge gasket after the engine is started.

⚠ CAUTION

Engine oil can damage your skin. Use the applicable safety equipment.
If engine oil touches the skin, clean the area immediately.
Discard used engine oil in accordance with local regulations.

8.3 ENGINE COOLANT

WARNING

To prevent injury from the hot-engine coolant or steam, never remove the expansion tank cap with the engine in operation. Stop the engine and wait until the radiator is cool. When radiator is cool, use caution to remove the expansion tank cap.

CAUTION

Engine oil can damage your skin. Use the applicable safety equipment.
If engine oil touches the skin, clean the area immediately.
Discard used engine oil in accordance with local regulations.

Check coolant level each day. The radiator must be full and the recovery bottle must be at the cold mark.

Drain and fill the cooling system each year. Empty and clean the recovery bottle.

Mix clean water with anti-freeze for the coldest ambient temperature. Read and follow the instructions on the anti-freeze container and the Engine manual.

Keep the radiator, engine oil cooler and hydraulic oil cooler air passages clean. Do not use compressed air to clean the fins. Only use low pressure water to clean radiator.

CAUTION

Stop engine and remove the starter key before pressure washing. Do not use a pressure washer near the instrument panel or engine radiator to prevent damage.

Check an tighten the engine fan belt at the specified intervals listed in the maintenance chart. Replace the belt, clamps and hoses at the specified intervals listed in the maintenance chart.

Have your Jacobsen Dealer check the cooling system if you need to add coolant more than one time a month or you add more than a liter of coolant at a time.

Check The Engine Coolant Level

1. The level of coolant in a cold expansion tank must be between the MIN and MAX indicators.

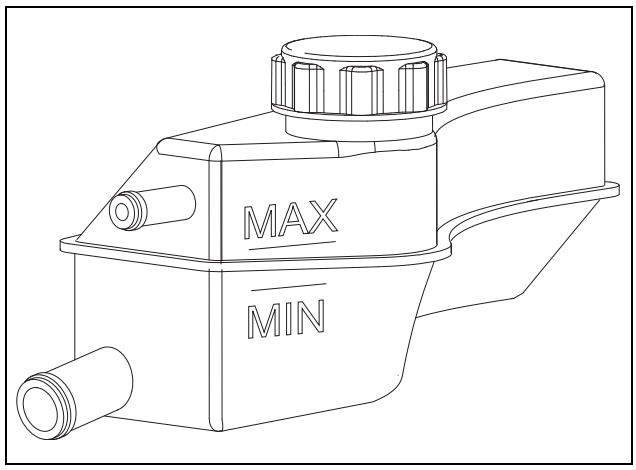

WARNING

To prevent injury from the hot-engine coolant or steam, never remove the expansion tank cap with the engine in operation. Stop the engine and wait until the radiator is cool. When radiator is cool, use caution to remove the expansion tank cap.

2. If you need to fill the tank, remove the expansion tank cap and fill with the correct anti-freeze mixture (**See Section 8.1**).
3. Replace the plastic cap.

Check The Engine Coolant Level Continued

How To Change Coolant

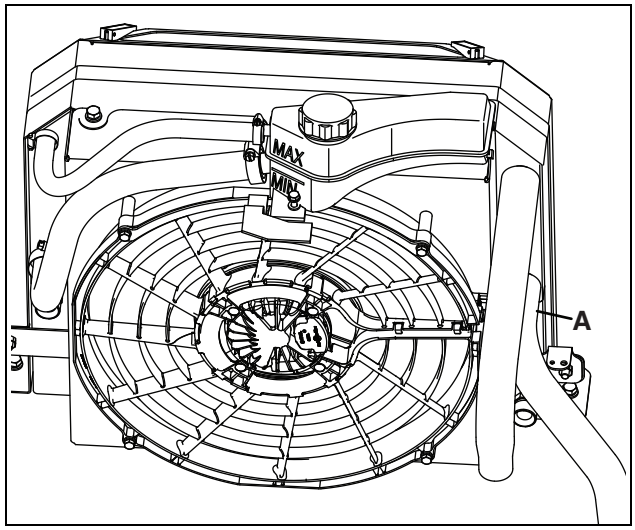

1. To drain coolant, remove the bottom hose (A) from the radiator. Drain the engine coolant into a container.
2. Replace the bottom hose (A) on to the radiator. Make sure all the hose clamps are tight.
3. Fill the cooling system with the correct anti-freeze mixture (**See Section 8.1**).
   Fill system through the expansion tank.
4. The level of coolant in a cold expansion tank must be between the MIN and MAX indicators.
5. Run the engine for approximately 5 minutes or until the thermostat opens.
6. Check the level of coolant in expansion tank. Fill the tank if more coolant is needed.

⚠ CAUTION

The anti-freeze can damage your skin. Use gloves when you use anti-freeze. If anti-freeze touches your skin, clean the area immediately.
Discard anti-freeze in accordance with local regulations.

8.4 ENGINE: FAN BELT - DIESEL

Check & Adjust Fan Belt.

The fan belt is adjusted so that it has sufficient tension to avoid undue stress on alternator bearings but does not slip on the alternator pulley. Use the following procedure to check the belt tension at the mid-point of the belt between crank shaft and alternator pulleys.

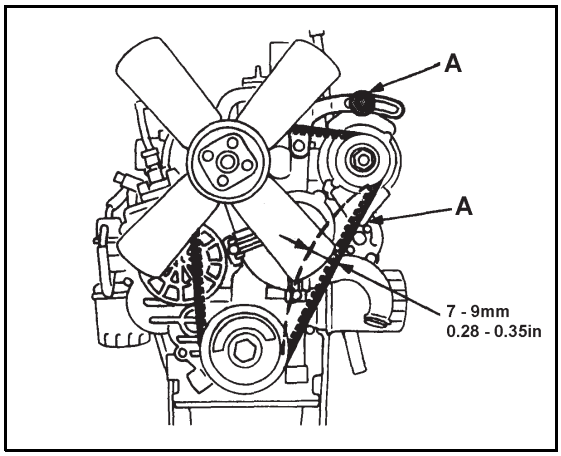

1. Loosen alternator bolt (A) and pivot bolt (B) on the underside of the alternator.
2. Move the alternator to tighten or loosen the belt so that a deflection of 7 to 9 mm is achieved at the mid-span with a load 10Kgf (98N/22lbs).
3. Re-tighten bolts.

8.5 HYDRAULIC FILTER

NOTICE

If you open the closed hydraulic transmission circuit, you need to fill the circuit with oil before the circuit is used again. When you fill the hydraulic tank, use only clean oil.
The hydraulic oil must go through a 25 micron filter before the oil enters the tank.

The hydraulic system is protected by one 10 micron filter. A 25 psi (1.7 BAR) visual indicator (A) is on the side of the filter head to indicate when service is needed.

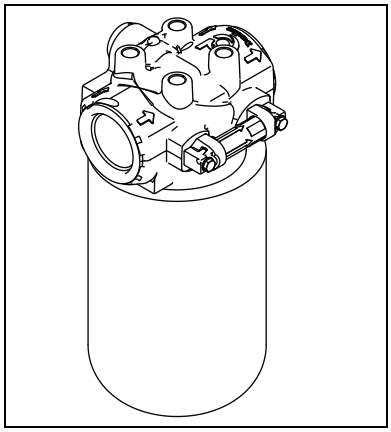

When you replace the filter:

1. Fill the new filter with hydraulic fluid and lubricate the filter O-ring with hydraulic fluid before you assemble the new filter. Tighten the filter with your hand before tightening the filter to 25 Nm (18.5 lbf-ft).
2. Operate the engine at the idle speed for five minutes to remove the air from the hydraulic system. The hydraulic filter warning light may illuminate for up to thirty minutes in cold conditions.
3. Stop the engine and check the level of hydraulic fluid in the tank. Add the hydraulic fluid to the full mark on the dipstick.

8.6 HYDRAULIC SYSTEM

Drain and replace the hydraulic oil if one of the following occur.

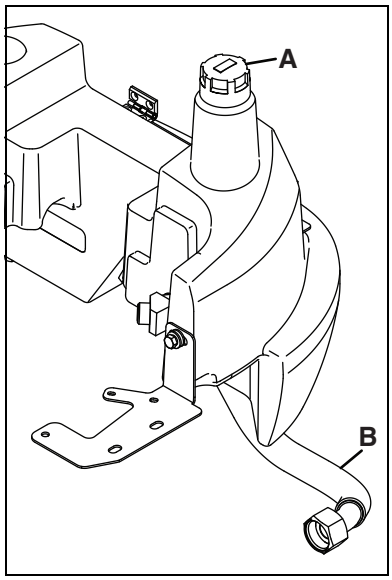

1. Component failure.
2. Water or foam is in the hydraulic fluid.
3. The hydraulic fluid has a rancid odor (indication of high heat).
4. When required by maintenance schedule.

Always replace the hydraulic filter when you replace the hydraulic fluid.

Change The Hydraulic Oil.

1. Clean the area around the oil cap to prevent dirt from entering the hydraulic system.
2. Disconnect the hose (B) from the gear pump. Allow the oil to drain into a container.
3. After the oil has drained, reinstall the hose and fill the tank with hydraulic fluid through filler (A).
4. Start the engine and remove the air from the hydraulic system. Operate all mower functions for 5 minutes to remove the air and to balance the hydraulic fluid level.
5. When all air is removed from the hydraulic-fluid, check the level, add the hydraulic fluid to the full mark on the dipstick.

⚠ CAUTION

Hydraulic oil can damage your skin. Use the applicable safety equipment. If engine oil touches the skin, clean the area immediately.
Discard used engine oil in accordance with local regulations.

8.7 HYDRAULIC HOSES

WARNING

To prevent injury from the hot, high pressure oil, never use your hands to check for oil leaks. Use the paper or cardboard to find leaks.

The hydraulic fluid pressure can have enough force to enter your skin. If hydraulic fluid has entered your skin, a doctor must remove the hydraulic fluid surgically within a few hours or gangrene can occur.

Always lower the cutting units to the ground, disengage all drives, engage parking brake, stop the engine and remove the key before you inspect or disconnect hydraulic lines or hoses.

Check visible hoses and tubes each day. Look for wet hoses or oil marks. Replace worn or damaged hoses and tubes before you operate the mower.

The replacement tube or hoses must follow the same path as the original hose. Do not move the clamps, brackets and cable-ties to a new location.

Completely inspect all tubes, hoses and connections in accordance with the maintenance chart.

NOTICE

If the hydraulic fluid becomes dirty, damage to the hydraulic system can occur.

Before you disconnect any hydraulic component, clean the area around the fittings and the ends of the hoses to stop the entry of dirt into the system.

Before you disconnect any hydraulic component, tag or mark the location of each hose then clean the area around the fittings.

To stop the entry of dirt into the system when you disconnect the component, be prepared to assemble plugs or caps to the ends of hoses and open ports. Clean any hydraulic fluid that spills.

Make sure “O” rings are clean and hose fittings are correctly installed before you tighten.

Prevent the hose from twisting. Twisted hoses can cause the hose connections to loosen as the hose moves while you operate the mower and can cause oil leaks.

The hydraulic hoses that are twisted or have sharp bends can decrease the oil flow and cause damage to the hoses. The decreased oil flow can cause system problems and increase the temperature of the hydraulic fluid.

WARNING

Only trained personnel must service the hydraulic system.

CAUTION

Hydraulic oil can damage your skin. Use gloves when you use hydraulic oil. If hydraulic oil touches your skin, clean the area immediately.

Discard used hydraulic oil in accordance with local regulations.

8.8 FUEL

WARNING

Refuel the mower before you start the engine. When the engine is in operation or while the engine is hot, never remove the fuel cap or add fuel to the mower.
Refuel outdoors only and do not smoke when you add fuel.
If the fuel spills, do not try to start the engine, but move the mower away from the area. Until fuel vapors are removed, do not allow the sparks, open flame or other types of ignition.
Never keep fuel containers near an open flame or any device that can cause the ignition of fuel or fuel vapors.
Always tighten the fuel tank cap and container cap after you add fuel.

CAUTION

Diesel fuel is flammable. Use caution when you add the fuel to the mower.
Only use an approved container. The spout on the container must fit inside the fuel filler neck. Never use the containers that are not approved to keep or transfer fuel.

Fill the fuel tank to less than 25 mm (1 inch) below the filler neck.

Use clean low sulfur Diesel fuel to the recommended specification. The use of Diesel fuel additives is not recommended. If fuel additives are used, the fuel additives must be approved for use in the engine type used in your machine. Refer to the engine manual for additional information.

Check fuel hoses and clamps at service interval (see chart). Replace the fuel hoses and clamps at first indication of wear or damage.

Keep the fuel according to your local, state or federal regulations. Below are some items you should be aware of.

What you need to do	Reasons to do it
Inspect your Diesel fuel tank, pipes and fittings. If there is Brass, Copper, Lead or Zinc in contact with the fuel, plan to change the parts.	Low emission Diesel engines use higher pressure injection equipment. The presence of Copper, Lead and Zinc in Diesel fuel can accelerate wear in fuel pumps and injectors. Diesel fuel can absorb these metals when in prolonged contact.
Check your fuel supplier is supplying ultra low sulfur Diesel. It has to meet ASTM D975 S15 or EN590:2009 or equivalent fuel with a sulfur content of less than 15 ppm (parts per million)	Low emission Diesel engines, use Particle Filters (DPF). The use of high sulfur fuel will block the DPF and damage the engine. Any engine damage caused by high sulfur fuel is not covered by warranty.
Ask your fuel supplier if there are records showing the amount of water mixed in with the Diesel fuel supplied.	Water in the fuel is harmful to the high-pressure injection equipment. Kubota recommends that water content must not be more than 0.05%
Ensure that Bio content to your Diesel fuel does not exceed 5% as described in ASTM D6751 or EN 14214	Higher Bio Diesel content has been proven to absorb more moisture from the atmosphere. The moisture and Bio content can result in the development of molds and bacteria. These accelerate the blocking of fuel filters.
Ask your fuel supplier to verify that fuel being delivered meets the lubricity level required set in ASTM D6079	Low emission Diesel engines use higher pressure injection equipment. The tolerances in the injection equipment require the fuel to provide lubrication.
Ask your fuel supplier to verify that fuel being delivered has less than 1 milligram of solid contaminant per litre of fuel.	Any particles in the fuel can damage parts within the fuel injection system, reducing performance. The vehicle fuel system will provide protection, but the cleaner the fuel into the vehicle, the lower the chance of a particle by passing the filtration system.

8.9 REPLACING FUEL FILTERS

1. Stop the engine.
2. Open the air valve (A) at the top of the filter (B) to release system pressure.
3. Remove fuel filter cartridge (B). Clean any fuel that spills.
4. Assemble new filter cartridge to the filter base. Tighten the cartridge with your hand.
5. Loosen hose clamps (C). Loosen filter clamp (E) and replace pre-filter (D).
6. Bleed air from the fuel system (See 8.12).

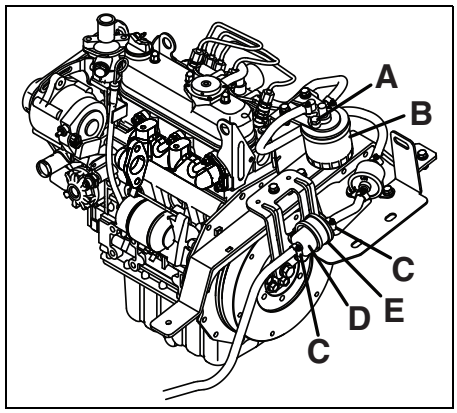

8.10 FUEL SYSTEM

The fuel system must be bled when:

- Starting the engine for the first time.
- The fuel tank becomes completely empty.
- The engine has not been used for an extended period of time.
- The fuel filter and/or fuel lines have been loosened, removed or replaced.

Bleeding the fuel system.

1. Fill the fuel tank.
2. Open the air vent on top of the fuel filter.
3. Turn the ignition switch to “Run Position” to operate the fuel pump. Allow the pump to run until a steady stream of fuel is coming out of the fuel filter air vent. Stop the pump and close the air vent.
4. Open the air vent on top of the injection pump, open air vent only when engine is NOT running.
5. Turn the ignition switch to START to operate the fuel pump. Allow the pump to run until a steady stream of fuel is coming out of the injection pump air vent. Stop the pump and close the air vent.

⚠ CAUTION

The diesel fuel can damage your skin. Use gloves when you use diesel fuel. If diesel fuel touches your skin, clean the area immediately.
Discard used hydraulic oil in accordance with local regulations.

8.11 AIR CLEANER

WARNING

Fuel and its vapors are extremely flammable and explosive.
Fire or explosion can cause severe burns or death.

CAUTION

Never start and run the engine with the air cleaner assembly or the air filter removed.

NOTICE

Do not use pressurized air or solvents to clean the filter. Pressurized air can damage the filter and solvents will dissolve the filter.

See the Maintenance Schedule for service requirements.

Service Air Filter

Check the service indicator (1) each day. If the red band become visible in the window (2), replace the filter elements.

Do not remove the elements to inspect or clean. Removal of the filter is not necessary and increases the risk of dust and other particles entering the engine.

When service is needed, first clean the outside of the filter housing (4), then remove the filter element carefully.

Clean the inside of the filter housing. Make sure dust and other particles do not get into the engine inlet hose.

Inspect the new element. Do not use a damaged element and never use an incorrect element.

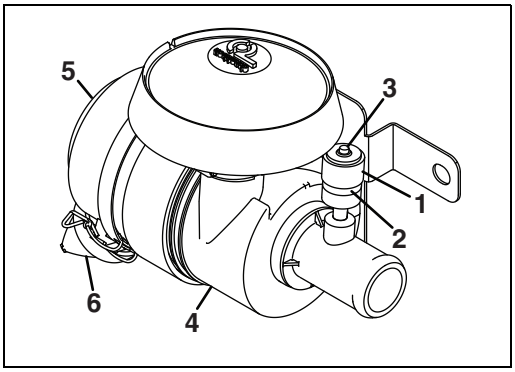

Assemble the filter element. Make sure the element seats correctly. Press the button (3) to set the service indicator.

Assemble the cap (5) to the filter housing (4). Make sure the cap seals around the filter housing. The dust valve (6) on the cap must be at the bottom of the filter. Fasten the cap with the two clips.

Check the air filter hose for wear or damage. Make sure the hose clamps are tight and hold the hose in position.

8.12 ENGINE EXHAUST

WARNING

The exhaust fumes contain carbon monoxide. The Carbon Monoxide in exhaust fumes can increase to dangerous levels if the exhaust is damaged or you operate in closed spaces. Inspect the complete-exhaust system every month and replace damaged components immediately.

NEVER operate the engine without enough ventilation.

The temperature of the exhaust components can be more than 300° F (149° C). To prevent the burns, do not touch a hot exhaust system.

If the exhaust note or color changes, stop the engine immediately. Identify the problem and have the system repaired.

Torque all exhaust manifold hardware equally. Tighten or replace the exhaust clamps.

8.13 CUTTING UNIT 673953, 54 & 55 / 671604, 05 & 06 / 673956, 57 & 58 LUBRICATION

Always clean the grease fitting before and after lubricating.

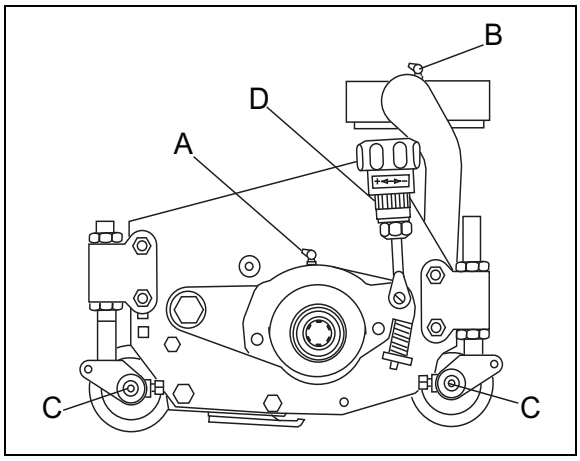

- Lubricate the following with Shell Darina R2 grease.
- Reel bearings (A) weekly of every 25 hours.
- Unit pivot (B) weekly or every 25 hours.
- Roll bearings (C) weekly or every 25 hours.
- Handwheel adjuster bearings (D) weekly or every 25 hours.
- Hydraulic motor and drive coupling every 400 hours.

8.14 CUTTING UNITS 67114 / 67115 / 67116 LUBRICATION

Always clean the grease fitting before and after lubricating.

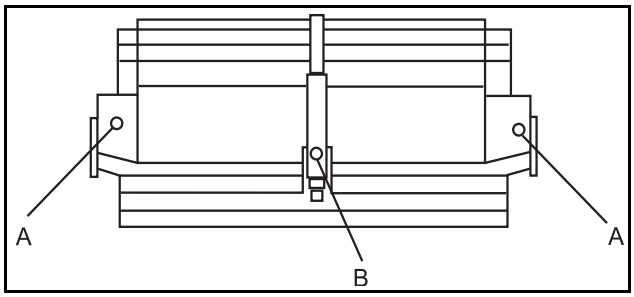

Lubricate the following with Shell Darina R2 grease:

- Mower pivot (A).
- Front and centre lift arm (B).

Apply grease with a manual grease gun, do not use a compressed air gun. Fill slowly until grease begins to seep out.

Periodically apply a small amount of lithium based grease to the seat runners.

For smooth operation of all levers, pivot points and other friction points that are not shown on the lubrication chart apply several drops of SAE 30 oil every 40 hours of operation or as needed.

- Grease fittings (A Mower Pivot, 3 Fittings).
- Front and Centre Lift Arm (B).

8.15 BACKLAP

DANGER

Always keep hands and clothing far away from powered reels to prevent severe personal injury. Never backlap reels with the engine running in an enclosed building.

Start the engine.

Lower the cutting units to the ground and inspect units for blockages or damage to the reels before commencing with backlapping.

The following conditions should be checked before activating the backlap function, the parking brake switch must be in the ON position, the traction pedal must be in the Neutral position, the cutting units must be lowered and the mow switch must be in the ON position.

To activate backlap move the orange button to the rear (towards the operator) and press the switch. The reels will start to operate in the reverse direction.

The reel valve contains an adjustable valve to control the speed of the reels.

Loosen the lock nut located behind the speed control knob, turn the speed control knob to the left to decrease the reel speed. Once the desired speed has been reached tighten the locknut.

Apply lapping compound, with a long handle brush, along the full length of the reel.

When the reels are honed, turn off backlap by pressing the rear of the backlap switch.

Repeat the full procedure on the other reels.

carefully and completely wash off any remaining compound.

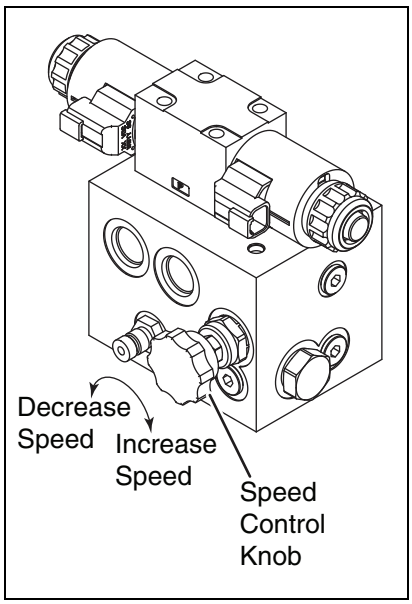

CAUTION

Ensure that the correct PPE is worn whilst performing the backlap process.

8.16 BATTERY

Before you service the battery, make sure the ignition switch is in the OFF position and the key is removed.

CAUTION

When you service the battery, always use insulated tools. Wear applicable eye protection and clothing. Discard used batteries in accordance with local regulations.

WARNING

The battery contains corrosive acid. Prevent any contact with the battery acid. Always Wash the Hands after you service a Battery.

WARNING

The battery posts, terminals and related parts contain lead and lead compounds. The State of California understands Lead to be a cause of cancer and reproductive harm.

Keep the battery terminal hardware tight, to prevent corrosion, apply a layer of silicone dielectric grease to battery terminals and ends of cables. Keep the vent caps and battery terminal covers in position.

Before welding any part on the Mower, disconnect the battery cables.

Battery Access

1. Loosen and remove the black socket head screw (A).
2. Lift the battery cover and set it to the side.



Confirm the battery polarity before you connect or you disconnect the battery cables.

When you remove the battery, always disconnect the negative (BLACK) battery cable before the positive (RED) battery cable.

When you install the battery, always connect the positive (RED) battery cable before the negative (BLACK) battery cable.

Flat Battery Start

1. Before you try to start the mower, check the condition of the drained battery.
2. Connect the positive (+) battery terminal of the charged battery to positive battery terminal of the drained battery.
3. Connect the negative (–) battery terminal of the charged battery to frame of vehicle with the drained battery.
4. Start the engine on the vehicle with the good battery, then start the mower.
5. Disconnect and remove the cables from the charged battery first.

8.17 CHARGING THE BATTERY

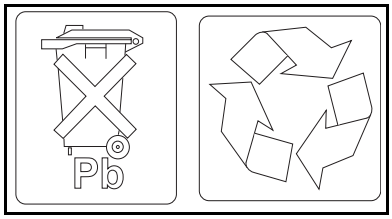

Read the battery charger manual for specified instructions on the operation of the battery charger.

Remove the battery from the mower before you charge the battery. Check the level of the electrolyte is above the plates in all of the cells, unless the battery is a closed unit.

Make sure the battery charger is turned OFF, then connect the battery charger to the battery terminals as shown in the battery charger manual.

Always turn OFF the battery charger before you disconnect the battery charger from the battery terminals.

WARNING

The battery can release hydrogen gas that is explosive. Work in an area with good ventilation and shield from any type of ignition.
Always connect the negative jumper cable to the frame of the mower with the drained battery.

8.18 TYRES

Check the tyre pressure as indicated in the Maintenance and Lubrication Charts, while the tyres are cool. Use an accurate low-pressure tyre gauge.

Keep the tyres inflated at the correct pressure and do a check each day for wear (see section 8.1).

⚠ CAUTION

Do NOT try to put a tyre on the rim unless you have the training, tools and experience. Incorrect mounting can cause injury

8.19 WHEEL MOUNTING PROCEDURE

Remove any dirt, grease or oil from the stud threads. Do not lubricate threads.

Put the wheel on the hub. Inspect the wheel to make sure of full contact between surface of wheel and hub.

Tighten all hardware with your fingers, then torque hardware in the order shown. Tighten each of the nuts in the top position (1).

Check and torque hardware as indicated in the Maintenance and Lubrication Charts. Torque wheel nuts as follows.

Front wheels 112 ±10 Nm (83 ± 7 lbf-ft).

Rear wheels 75 ±10 Nm (55 ± 7 lbf-ft).

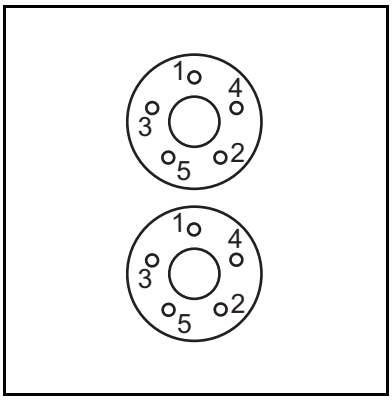

⚠ WARNING

Make sure the mower is parked on a solid and level surface. Never work on a mower that is supported only by the jack. Always use jack stands.

If only the front or rear of the mower is lifted, put the chocks in front of and behind the wheels that are not lifted.

8.20 ROPS

A Roll Over Protective Structure (ROPS) is included with this mower. Inspect the ROPS as indicated in the Maintenance chart for loose hardware or damage.

CAUTION

Keep the ROPS hardware correctly fastened. Do not do any welding operations.
Do not drill, change or bend the ROPS. Replace damaged ROPS. Do not try to correct a damaged ROPS.

Inspect the seat, seat belt, ROPS mounting hardware and ROPS frame for damage. Replace all damaged parts immediately. All the replacement parts for the ROPS must be approved Ransomes Jacobsen Limited parts as shown in the Parts Manual.

Check and torque all ROPS hardware as indicated in the Parts manual.

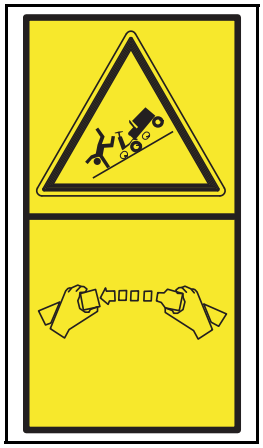

DANGER

The seat belt must always be worn. The ROPS frame must be in the position for operation. This instruction is given to meet:
The Machinery Directive, 2006/42/EC sections 3.2.2, seating & 3.4.3, rollover. (ANSI B71.4-2012 section 20.7)
Jacobsen recommends that the owner operator of the machine complete a local risk assessment on the machine to find any conditions that do not follow this rule.

8.21 CARE AND CLEANING

CAUTION

To prevent fire, clean the grass clippings and dirt from the cutting units, drives, engine and exhaust components.

Clean the mower and cutter decks after each use. To prevent damage to the engine, do not wash the mower with the engine in operation.

NOTICE

Do not wash any part of the mower that is hot. Do not use the high-pressure spray or steam. Use only cold water and automotive cleaners. When you use compressed air, use the correct eye protection.

Use clean water to wash your equipment.

CAUTION

It is important not to use high pressure water or air to clean radiator fins. Do not pressure wash engine.

NOTICE

The use of salt water or dirty water is known to cause rust and corrosion of metal parts and can cause damage or failure. This damage is not covered by the factory warranty.

Do not spray water at the instrument panel, ignition switch, controller or other electrical components or at bearing housings and seals.

Clean all plastic or rubber parts with a weak soap solution or use commercially available rubber cleaners.

To keep the original high polish of the plastic parts, wax with a good grade of one-step cleaner wax.

Repair damaged metal surfaces and use Ransomes Jacobsen touch-up paint. Apply wax to the equipment for maximum paint protection.

WARNING

Never use your hands to clean the cutting units. Use a brush to remove the grass clippings from the blades. The blades are sharp and can cause injuries.

8.22 MOWER STORAGE

General

1. Clean the mower and lubricate. Repair and paint damaged or open metal.
2. Inspect the mower, tighten all hardware, replace worn or damaged components.
3. Drain and fill the radiator as indicated in the Maintenance and Lubrication Charts.
4. Drain fuel tank.
5. Clean the tyres.
6. When the vehicle is not being used for an extended period, the tyre pressures must be increased. Inflate to the maximum rating on the tyre wall to make sure that flat spots do not occur. Decrease the tyre pressure before the vehicle is put into operation.
7. Keep the mower and all accessories clean, dry and protected from the elements. Never keep the mower near an open flame or spark which can cause ignition of the fuel or fuel vapors.
8. When a label is damaged or removed from the machine, make sure that the label is replaced. See the Labels section of this manual or the Parts Manual.

Battery

1. Remove, clean and keep the battery in the upright position on a surface that is not metal in a cool dry location. To prevent increased battery discharge, do not keep the battery on a metal surface.
2. Check and charge the battery every 60 to 90 days.
3. Keep the battery in a cool dry location. To decrease the self discharge rate, the temperature must not be more than 80° F (27° C) or less than 20° F (-7° C).

Engine

1. While the engine is warm, remove the drain plug, drain the oil from the crankcase and change the oil filter. Install the drain plug and fill the engine with oil.
2. Clean the outside surface of the engine. Paint bare metal or apply a thin layer of rust preventative oil.

Cutting Units

1. Completely clean the cutting units. Repair and paint any damaged or bare metal surfaces.
2. Lubricate all grease fittings and friction points.
3. Apply a thin layer of rust preventative oil to the sharpened edges of the blades.

⚠ CAUTION

The cutting unit blades can have sharp edges.
To prevent injury, use caution when you service or hold the blade.

After Storage

1. Check and install the battery. If necessary, charge the battery.
2. Check or service the fuel filter and air cleaner.
3. Check the radiator coolant level.
4. Check the level of engine oil and hydraulic fluid.
5. Fill the fuel tank with fuel. Bleed the fuel system.
6. Make sure the tyres are correctly inflated.
7. Remove all oil from the blades. Adjust the cutting height.
8. Start the engine at 1/2 throttle. Allow the engine to become warm and lubricated.

⚠ WARNING

Never operate the engine without enough ventilation or in an enclosed area.
The carbon monoxide in the exhaust fumes can increase to dangerous levels.

9.1 ENGINE PROBLEM DIAGNOSTICS

The Engine is difficult to start	
Cause	**Action**
The fuel is thick and does not flow.	Check the fuel tank and fuel filter.
	Remove any contamination from the fuel system.
	Clean the fuel filter with kerosene.
Air or water mixed in fuel.	The fuel system is a pressure type. Air in the system will cause a problem. Bleed the Fuel System.
	To get correct fuel injection pressure, check carefully for loose fuel line couplings and loose cap nut.
	Loosen the joint bolt stop, fuel filter and air vent screws of fuel injection pump to remove all the air in the fuel system.
The engine oil becomes thick in cold weather and engine cranks slowly.	Change the grade of oil according to the average temperature.
The battery is discharged and the engine will not crank.	Charge the battery.
	In the winter, always remove the battery from the machine. Keep the battery charged and store in a dry, safe environment.

Loss of Power	
Cause	**Action**
No fuel.	Check the fuel system.
Moving parts at more than operating temperature.	Check lubricating oil system.
	Make sure that the lubricating oil filter flow is not decreased.
	A dirty filter element can cause loss of lubrication. Change the filter element.
The air cleaner is dirty.	Clean the filter element every 100 hours of operation.
Injection pump wear.	Use the correct grade of fuel. Low grade fuel will cause the fuel pump to wear. Only use the specified Diesel fuel.

The Engine stops	
Cause	**Action**
There is no Fuel.	Check the fuel tank and fill with fuel.
	Check the fuel system for air leaks.
Bad nozzle.	If necessary, replace the nozzle.
Moving parts at more than operating temperature. Not enough lubrication.	Check amount of engine oil with oil level gauge.
	Check lubricating oil system.
	The oil filter cartridge must be replaced at every second oil change.

Dirty Smoke or carbon increase on the Exhaust	
Cause	**Action**
Wrong fuel.	Only use Diesel fuel specified in specification section.
Bad nozzle.	If necessary, replace the nozzle.

Engine must be stopped immediately	
Cause	**Action**
The colour of the exhaust turns dark.	Check the fuel system and the fuel injection nozzle.
The bearings are at more than operating temperature.	Check the lubricating system.
The oil-temperature light is illuminated.	Check the lubricating system.
	Check the function of the relief valve in the lubricating system.
	Check the pressure switch.
	Check the fuel filter base gasket.

Engine Temperature above Safe Maximum.	
Cause	**Action**
Engine oil low.	Check oil level. Fill to specified level.
The fan belt is broken or has defects.	Change the belt or adjust the belt tension.
Coolant low.	Fill to the specified level.
The anti-freeze solution is too strong.	Add clean water only or change to coolant of the correct ratio.
The radiator screen or radiator fins are dirty.	Clean screen or fins carefully.
The radiator or coolant lines are dirty.	Clean or replace the radiator and parts.
The fan, radiator or radiator cap has defects.	Replace the parts.
The thermostat has defects.	Check the thermostat and replace if necessary.
The temperature gauge or sensor has defects.	Check the temperature with thermometer and replace if necessary.
Engine is operated at more than maximum load.	Decrease the load.
Head gasket has defects or water leakage.	Replace the parts.
Incorrect fuel used.	Use specified fuel.

10.1 QUALITY OF CUT PROBLEM SOLVING

Do a “test-cut” to measure the performance of the mower before you begin the repairs.

An area must be available for “test cuts.” Use this area to give a base line with which to measure the mower performance.

When the work is completed, repeat the “test-cut” to check the mower performance.

The following items must be checked to make sure of an accurate “test cut.”

1. Mowing (Ground) Speed.
2. Blade Sharpness.
3. Height-of-Cut (HOC).
4. Roller and Roller Bearing Condition.
5. Blade Speed.

10.2 THE STEP CUT

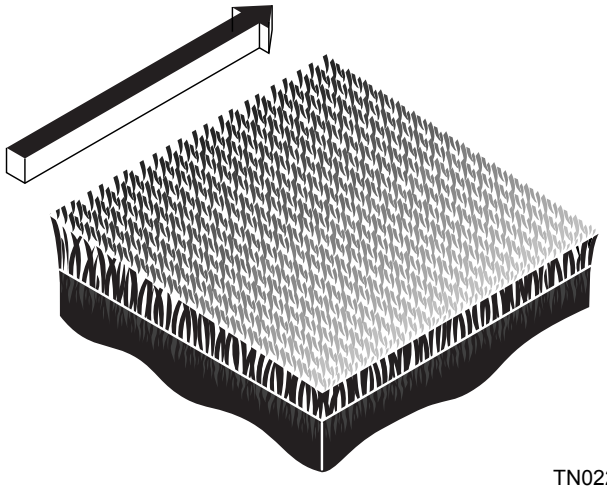

TN0221

NOTE: The Arrow indicates direction of travel.

"Step cutting" occurs when the grass is cut higher on one side. The cause is mechanical wear or incorrect setting of the roller.

Possible Cause	Correction
The HOC (height-of-cut) settings are different on the side of one cutting unit or the cutter decks are set at different heights.	Check HOC adjustment of cutting units. (Refer to Parts and Maintenance Manual).
Worn roller bearings or deck caster wheels.	Check and replace the roller bearings, deck caster wheels.
Cutting unit movement is decreased.	Check and remove the cutting unit movement limit.
Changes in turf density.	Change the direction of cut.
The Machine ride height is not equal from side to side.	Check and adjust the tyre pressure. (Refer to Parts and Maintenance Manual).
Cutting unit height is not equal from side to side.	Check and adjust the mower weight distribution.

10.3 SCALPING

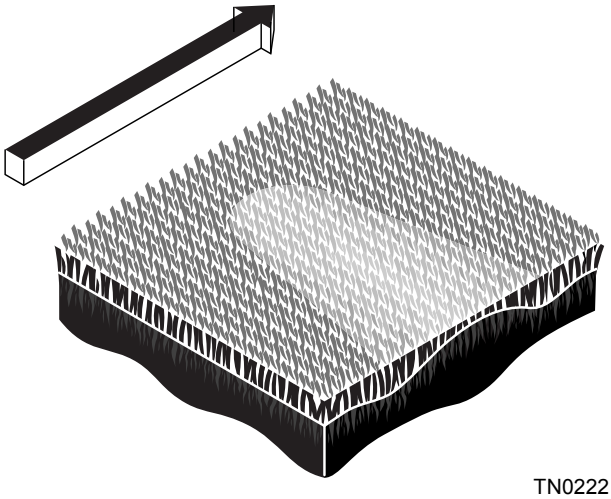

TN0222

"Scalping" is a condition in which some areas are cut shorter than the set height of cut. This results in very short grass or brown areas. The cause is a low height-of-cut (HOC) setting, rough surface.

NOTE: *The Arrow indicates direction of travel.*

Possible Cause	Correction
The HOC (height-of-cut) settings are low for the conditions.	Check and adjust the HOC settings.
The mower can not follow the ground in this direction.	Change the direction of cut.
You try to cut deep grass in one try.	Increase the HOC.
Cutting at more than the recommended speed.	Decrease the cutting speed.

10.4 STRAGGLERS

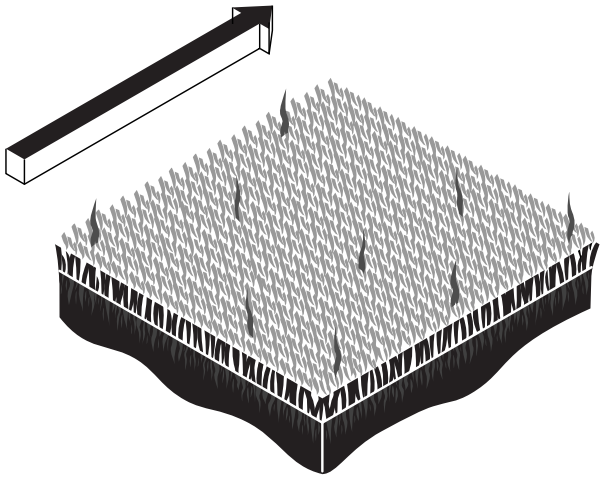

TN0223

"Stragglers" are separated blades of not cut or incorrectly cut grass.

NOTE: *The Arrow indicates direction of travel.*

Possible Cause	Correction
The cutting blade is blunt.	Sharpen or replace the blade.
Cutting at more than the recommended speed.	Decrease the cutting speed.
You try to cut deep grass in one try.	Increase the number of cuttings.
Mowing in the same direction.	Change the direction of cut on each cut.

10.5 STREAKS

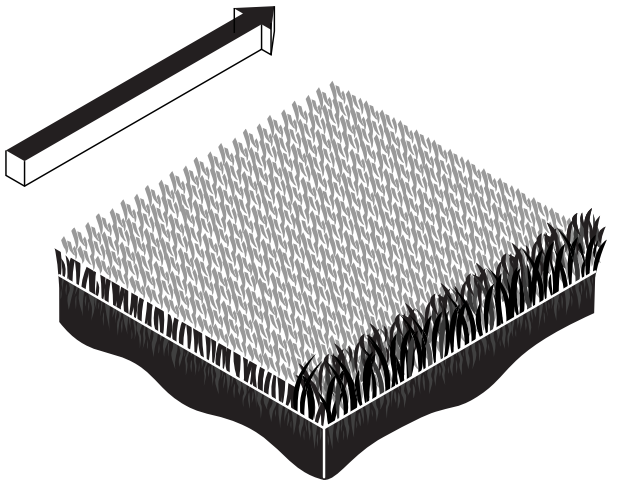

TN0224

A streak is a strip of longer grass in the cutting area. The cause is a damaged blade or you turn quickly when you mow.

NOTE: *The Arrow indicates direction of travel.*

Possible Cause	Correction
Damaged blade.	Replace the blade.
When you turn suddenly, the cutting units do not cut all the area.	Make the turns slow and allow the cutting units to cut the complete area. Change the cut pattern on side hills.
The tire mats down grass before the cut.	Check and adjust the tyre pressure. (Refer to Maintenance Section).
Wet grass is compressed before the cut.	Mow when grass is dry.

10.6 WINDROWING

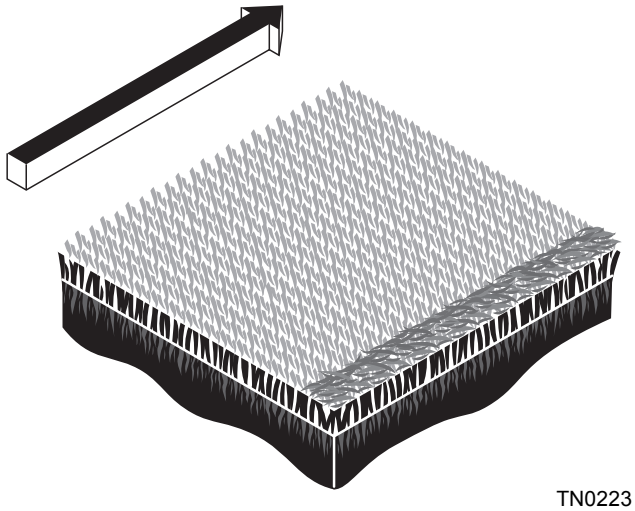

TN0223

"Windrowing" is a increase of cut grass in the corner of the cutting units or between the cutting units, that leaves lines in the direction of travel.

NOTE: *The Arrow indicates direction of travel.*

Possible Cause	Correction
Grass is too tall.	Mow more often.
Mowing while grass is wet.	Mow when grass is dry.
Grass built up on roller.	Clean rollers and scrapers.
Grass collecting on mower or cutting unit frame.	Clear cutting unit(s) discharge deflector.

10.7 MISMATCHED CUTTER DECKS

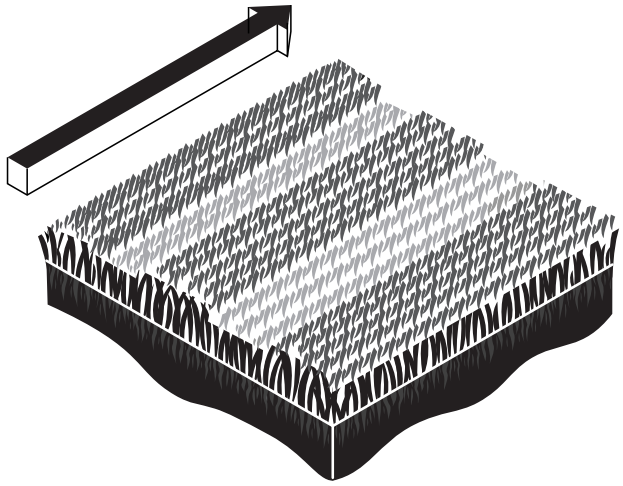

TN1278

"Mismatched cutting units." This problem is identified by the pattern shown, that of different height of cut or the cut has a step appearance. When the cutting units are set at different heights or the motors turn at different speed, you will see this pattern.

NOTE: *The Arrow indicates direction of travel.*

Possible Cause	Correction
The HOC is not set equally on all the units.	Check and adjust the HOC on all cutting units to same height. (Refer to Maintenance Section.)
Difference in rotary cutting unit speeds.	Check operation of the cutting motors, repair or replace as required.
The difference in the mower ride height from side to side.	Check and adjust the tire pressure. (Refer to Maintenance Section.)
	Check and adjust the mower weight distribution.

NOTES

11.1 FUSE AND RELAY/COMPONENT IDENTIFICATION

FUSE BOX B

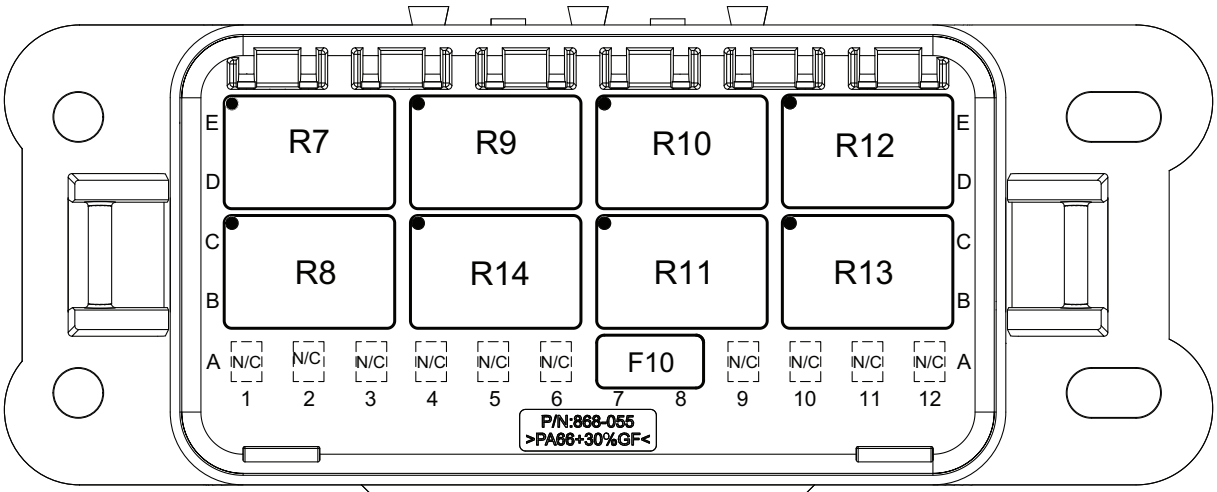

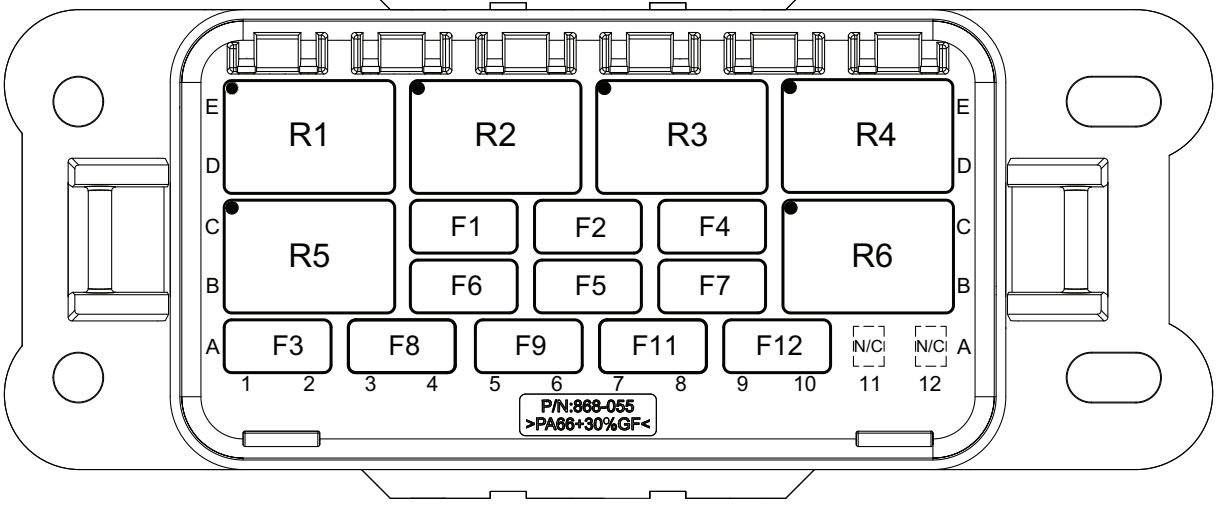

FUSE BOX A

FUSES

Component	Rating	Type	Description
F1	25 Amp	Mini	Ignition (1) Relay Supply.
F2	25 Amp	Mini	Ignition (2) Relay Supply.
F3	2 Amp	Mini	Ignition Relay 1 & 2 Coil Supply.
F4	25 Amp	Mini	Crank Relay Supply.
F5	30 Amp	Mini	Cooling Fan Supply.
F6	10 Amp	Mini	Seat Relay Supply.
F7	15 Amp	Mini	Engine Shut Off Relay Supply.
F8	15 Amp	Mini	Park Brake, Mow, Backlap, Neutral Switch & Engine Shut Off, Crank Inhibit Relay.
F9	10 Amp	Mini	Glow Plug Relay, Timer & Indicator, Low Oil Pressure Relay, Alternator Excite, Cross Cut Proximity Switch, Seat Switch & Multi Function Gauge, Horn & Transport Sensor.
F10	30 Amp	Mini	Glow Plug Relay.
F11	15 Amp	Mini	12 Volt Accessory.
F12	15 Amp	Mini	Work Lamps (Optional)

RELAYS

Component	Rating	Type	Description
R1	SPDT N/C=20 Amp + N/O 35 Amp	Micro 280	Ignition Relay 1 (Part Number 4333409).
R2	SPDT N/C=20 Amp + N/O 35 Amp	Micro 280	Ignition Relay 2 (Part Number 4333409).
R3	SPDT N/C=20 Amp + N/O 35 Amp	Micro 280	Crank Relay (Part Number 4333409).
R4	SPDT N/C=20 Amp + N/O 35 Amp	Micro 280	Crank Inhibit Relay (Part Number 4333409).
R5	SPDT N/C=20 Amp + N/O 35 Amp	Micro 280	Lift Relay (Part Number 4333409).
R6	SPDT N/C=20 Amp + N/O 35 Amp	Micro 280	Engine Shut Off Relay (Part Number 4333409).
R7	SPDT N/C=20 Amp + N/O 35 Amp	Micro 280	Low Oil Pressure Inhibit Relay (Part Number 4333409).
R8	SPDT N/C=20 Amp + N/O 35 Amp	Micro 280	Lift / Lower Relay (Part Number 4333409).
R9	SPDT N/C=20 Amp + N/O 35 Amp	Micro 280	Mow Relay (Part Number 4333409).
R10	SPDT N/C=20 Amp + N/O 35 Amp	Micro 280	Backlap Relay (Part Number 4333409).
R11	SPDT N/C=20 Amp + N/O 35 Amp	Micro 280	Glow Plug Relay (Diesel Only) (Part Number 4333409).
R12	SPDT N/C=20 Amp + N/O 35 Amp	Micro 280	Lower Inhibit Relay (Part Number 4333409).
R13	SPDT N/C=20 Amp + N/O 35 Amp	Micro 280	Transport Speed (Option) (Part Number 4333409).
R14	SPDT N/C=20 Amp + N/O 35 Amp	Micro 280	Lower Latch Relay (Part Number 4333409).
R15	SPDT N/C=20 Amp + N/O 20 Amp	Delay Type	Seat Delay Relay 2.5 Seconds (Part Number 672638).
R16	SPDT N/C=10 Amp + N/O 10 Amp	Delay Type	Lift Delay Relay 1 Second (Part Number 672639).

NOTES

12.1 ENGINE SPECIFICATION

Model	D1105-E4B
Type:	Vertical, Water Cooled, 4-cycle Diesel engine
Number of Cylinders	3
Bore and Stroke	78 mm x 78.4 mm (3.07 in. x 3.09 in.)
Total Displacement	1.123 liters (68.53 cu.in.)
Combustion Chamber	Indirect Injection
SAE Net Intermittent kW / rpm H.P. (SAEJ1349) (HP / rpm)	18.5 kW @ 3000 rpm (24.8 HP @ 3000 rpm)
SAE Net Continuous kW / rpm H.P. (SAEJ1349) (HP / rpm)	15.4 kW @ 3000 rpm (20.7 HP @ 3000 rpm)
Maximum Speed:	3150 ± 50 rpm (No load)
Idle Speed:	1650 ±25 rpm
Firing order	1-2-3
Direction of Rotation	Counter-clockwise (viewed from flywheel side)
Injection Pump	Bosch MD type mini pump
Injection Pressure	13.73 MPa (194kgf/cm², 1991 psi)
Injection Timing (Before T.D.C.)	0.35 rad(18°)
Compression Ratio	24:1
Fuel:	Diesel to BS EN590 or ASTM D975 (“Ultra Low Sulphur”)
Lubrication (API Class)	Above CF grade
Oil Sump Capacity:	5.1 litres (1.35 US Gals)
Dimensions (length x width x height)	497.8 mm x 396.0 mm x 608.7 mm (19.60 in. x 15.59 in. x 23.96 in.)
Dry Weight kg (lbs)	93.0 kg (205 lbs)
Starting System	Cell starter with glow plug
Starter Motor	12V, 1.2kW
Charging Generator	12V, 40 Amp

Note: Specifications are subject to change without notice.

12.2 DIMENSIONS AND WEIGHTS

A	Width Of Cut	178 cm	70.1 In.
B	Overall Width	246 cm	83.07 In.
C	Maximum Width Transport With Floating Head At 25 mm Height Of Cut	233 cm	87.4 In
D	Maximum Height With ROPS Frame Up	206 cm	81.1 In.
E	Total Length	246 cm	96.85 In
F	Wheel Base	136 cm	53.54 In.
G	Wheel Track Front	123 cm	48.42 In.
H	Ground Clearance: With Floating Head At 25 mm Height Of Cut	59 mm	2.32 In.
	Turning Circle	213 cm	83.86 In.
	Weight Of Machine With ROPS, No Cutting Units And Fuel Tank Empty	1035 kg.	2281.78 lb.
	Maximum Front Axle Loading	776 kg.	1710.8 lb.
	Maximum Rear Axle Loading	259 kg.	571 lb.
	Weight of one 26 inch 5 Knife Cutting Unit 673953 / 54 / 55	67kg.	147 lb.
	Weight of one 26 inch 7 Knife Cutting Unit 671604 / 05 / 06	85 kg.	187 lb.
	Weight of one 26 inch 11 Knife Cutting Unit 673956 / 57 /58	105 kg.	231 lb.
	Weight of one 26 inch 7 Knife Cutting Unit 068093 / 94 / 95	69 kg.	152 lb.
	Weight Of 28.7 Litres (7.58 US Gallons) (6.3 Imp Gallons) Of Diesel Fuel	20.4 kg.	45.0 lb.

Note: Specifications are subject to change without notice.

3WD Option Cutting Units Lowered
Front View.

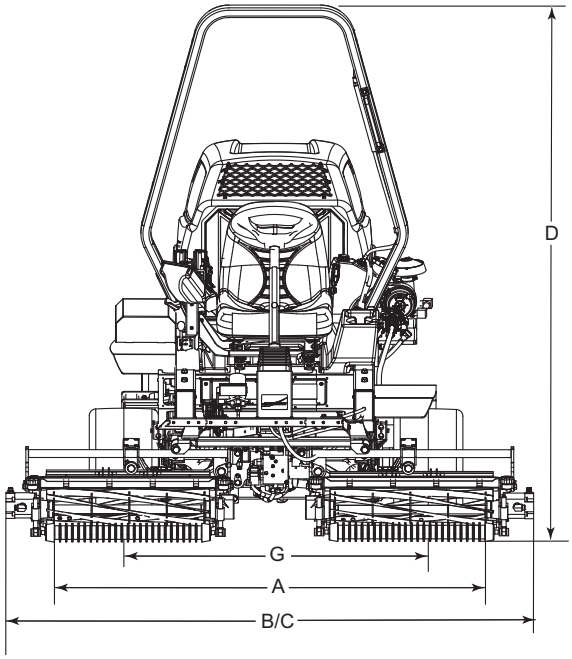

3WD Option Cutting Units Raised
Position Right Side View.

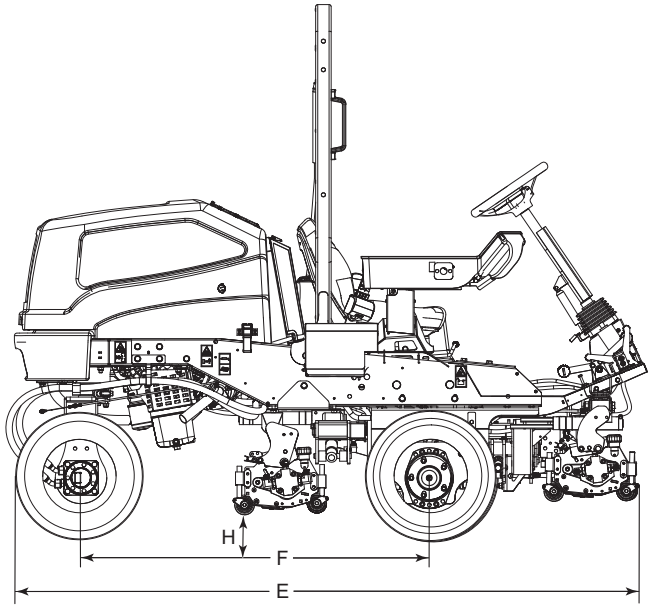

12.3 MACHINE SPECIFICATION

Frame construction: Heavy duty steel chassis with box section frame rails.

Cutter Deck Drive: TR320, Three individual hydraulic motors.

Transmission: 3WD Transmission: Hydrostatic closed loop parallel cross series SureTrac system. Variable displacement piston pump. Front high torque fixed displacement piston wheel motors. Full time auto 3WD forward and reverse.

Speeds:

Cutting: 0 - 9.5 km/h (0 - 5.9 mph) Forward.

Transport: 0 - 14 km/h (0 - 8.7 mph) Forward.
0 - 6 km/h (0 - 3.7 mph) Reverse.

Steering: Hydrostatic powered steering.

Ground pressure: Dependant upon the tyre pressures and the accessories installed.

Brakes: Hydrostatic braking with wet disc parking brakes on the front wheels.

Battery: 12V, 425 CCA, 45 Amp Hours Capacity, SAE Large Posts.

Mower Lift/Lower: Hydraulic Double Acting Cylinders.

Hydraulic Tank Capacity: 28.4 Litres (6.2 Imp Gallons/7.5 U.S Gallons).

12.4 HYDRAULIC SPECIFICATION

Circuit Description	Flow @ 3000 rpm engine speed Litres/Minute	Relief Valve Pressure BAR (PSI)
Forward Traction Circuit	105	280 (4060)
Reverse Traction Circuit	105	280 (4060)
Charge Pressure	19.17	14 (200)
Cutting Circuit	19.17	153 (2200) in Reel Valve
Steering and Lift/Lower	19.17	140 (2015)
Lift/Lower	19.17	31 (450)

12.5 VIBRATION

The machine was tested for hand and arm vibration levels. The operator was in the normal position to drive the vehicle, with two hands on the steering mechanism. The engine was in operation and the cutting device was in rotation. No drive was engaged.

The Machinery Safety Directive 2006/42/EC
By compliance to:
The Lawnmower Standard BS EN ISO5395-3:2013
Referenced to Hand/Arm: BS EN ISO20643:2008

Information Supplied for Physical Agents Directive 2002/44/EC
By reference to:
Hand/Arm Standards: BS EN ISO 5349-1 (2001)
BS EN ISO 5349-2 (2002)

Hand / Arm Acceleration Level	TR330
	Maximum of RH and LH Accelerations m/s²
	0.9 ± 0.40

Whole-body vibration measurement was carried out with the machine traveling in a straight line at a speed close to 6 km/h on a flat horizontal level surface. The height of cut was set at the lowest position and the cutting means engaged.

Each reading shall be obtained from a signal time suitable f
The Machinery Safety Directive 2006/42/EC
By compliance to:
Whole Body EN1032:2003

Information Supplied for Physical Agents Directive 2002/44/EC
By reference to:
Whole Body Standards BS EN ISO 2631-1 (1997)

Whole Body Acceleration Level	TR330
	Maximum Weighted Acceleration m/s²
	0.89 ± 1.57

12.6 NOISE

When the machine was tested for sound pressure (Operator Ear).

The Machinery Safety Directive 2006/42/EC
And
Exposure Of Workers To The Risks Arising From Physical Agents (Noise) Directive 2003/10/EC

By compliance to:
The Lawnmower Standard BS EN ISO 5395:2013
And
Sound Pressure Standard EN ISO 3746: 2010

Measured Sound Pressure 84.3 dB(A) ± 0.40

When the machine was tested for sound power (Noise in the Environment).

The Machinery Safety Directive 2006/42/EC
And
Noise Emission In The Environment By Equipment For Use Outdoors
Directive 2000/14/EC

By compliance to:
Sound Power Standard EN ISO 3744:2010

Measured Sound Power 101 dB(A) ± 1.24

12.7 SLOPES

⚠ WARNING

DO NOT USE ON SLOPES OF MORE THAN 14°.
The slope was calculated according to the requirements of BS EN ISO 5395:2013

12.8 CUTTING UNIT SPECIFICATION

	67353/ 54 / 55	671604 / 05 / 06	673956 / 57 / 58
Construction	Heavy duty welded pressed steel		
Reel Length	660 mm (26 in)		
Number of Knives	5	7	11
Reel Diameter (New)	165 mm (6.5 in)		
Minimum Reel Diameter (Before Replacement)	149 mm (5.875 in)		
Cylinder to Bottom Blade Adjustment	Self locking notched hand micro adjusters. Each notch giving 0.04mm (0.0015in) of movement.		
Height of Cut	12 - 47 mm (0.47 - 1.85 in)		
Rear Roll	Full width 75 mm (3in) diameter plain roll running on taper roller bearings with shaft seals and lubricators.		
Front Roll	Full width 75 mm (3in) diameter steel grooved roll running on taper roller bearings with shaft seals and lubricators. or Full width 75mm (3in) diameter plain steel roll running on taper roller bearings with shaft seals and lubricators.		
Height of Cut Adjustment Front	Threaded roll carriage & locknuts.		
Height of Cut Adjustment Rear	Coarse adjustment: Three position housing mounting. Fine adjustment: Threaded roll carriage & locknuts		
Transmission	By hydraulic motor through cardan shaft to cutting cylinder.		
Maximum Reel Speed at Maximum Engine rpm	1240rpm		

	068093/ 94 / 97
Construction	Heavy duty welded pressed steel
Reel Length	660 mm (26 in)
Number of Knives	7
Reel Diameter (New)	178 mm (7 in)
Minimum Reel Diameter (Before Replacement)	159 mm (6.25 in)
Height of Cut	9.5 -69.8 mm (0.37 in - 2.75 in) (3/8” - 2 3/4”)
Rear Roll	Full width 63.5 mm (2.5 in) diameter plain Steel roll running on taper roller bearings with shaft seals and lubricators.
Front Roll	Full width 75 mm (3in) diameter steel or nylon grooved roll running on taper roller bearings with shaft seals and lubricators. or Full width 75mm (3in) diameter plain steel roll running on taper roller bearings with shaft seals and lubricators.
Height of Cut Adjustment	Threaded roll carriage & locknuts.
Transmission	By hydraulic motor through coupling to cutting cylinder.
Maximum Reel Speed at Maximum Engine rpm	1240rpm

Note: Specifications are subject to change without notice.

12.9 CUTTING PERFORMANCE

UK Cutting Units.

39 cuts per metre at 9.5 km/hr with 5 knife cylinders.
55 cuts per metre at 9.5 km/hr with 7 knife cylinders.
86 cuts per metre at 9.5 km/hr with 11 knife cylinders.

1.58 hectares/hr.at 9.5 km/hr. (3.9 acres/hr at 6 mph)

10% allowance is included for normal overlaps and turning at the end of each cut.

U.S Cutting Units.

39 cuts per metre at 9.5 km/hr with 5 knife cylinders.
55 cuts per metre at 9.5 km/hr with 7 knife cylinders.
86 cuts per metre at 9.5 km/hr with 11 knife cylinders.

1.78 hectares/hr.at 9.5 km/hr. (4.4 acres/hr at 6 mph)

10% allowance is included for normal overlaps and turning at the end of each cut.

12.10 RECOMMENDED LUBRICANTS

Grease:
Shell Darina R2 lithium grease or equivalent.

12.11 ACCESSORIES

Mower Options (USA Units).

068093 - LH Front 0.66 m (26") x 7-Blade Reel.
068094 - RH Front 0.66 m (26") x 7-Blade Reel.
068097 - Centre 0.66 m (26") x 7-Blade Reel.

067731 - (Set of 3) 66 cm (26") Grooved Steel Front Rollers.
069147 - (Set of 3) 66 cm (26") Grooved Front Roller Scrapers.
067909 - 66 cm (26") Rear Roller Scraper (3) Required.
674415 - US 66 CM 26” Attachment Kit (Required Accessory for US 26” Units).

Mower Options (UK Units).

673953 5 Knife Floating Head Unit Less Front Rollers, Left.
673954 5 Knife Floating Head Units Less Front Rollers, Right.
673955 5 Knife Floating Head Units Less Front Rollers, Centre.

671604 7 Knife Floating Head Unit Less Front Rollers, Left.
671605 7 Knife Floating Head Units Less Front Rollers, Right.
671606 7 Knife Floating Head Units Less Front Rollers, Centre.

673956 11 Knife Floating Head Unit Less Front Rollers, Left.
673957 11 Knife Floating Head Units Less Front Rollers, Right.
673958 11 Knife Floating Head Units Less Front Rollers, Centre.
JMAB422 0.66 m (26") Grooved Front Roller & Scraper (For Floating Head Units) (3 Required).
JMAB423 0.66 m (26") Smooth Front Roller & Scraper (For Floating Head Units) (3 Required).

Accessories.

672858 - Weight Transfer Kit.
4395006 - Back Lap Kit.
4392007 - Mow Mode.
4400013 - LED Work Light Kit.
068127 - Adjustable Canopy / Sunshade Kit.
669644 - Ball Guard.
4399787 - Inclinometer.
LMAC629 - Foot Rest.
4184540 - Bat (for clearing blockages).
4185600 - Reel to bedknife setting paper.

NOTES

13.1 GUARANTEE

WARRANTY

Warranty is subject to specific terms and conditions, e.g. wearing parts, unapproved modifications, etc. are not included. For a full set of warranty conditions, contact your local dealer or distributor.

NOTICE

The use of components not provided by the manufacturer under this warranty or maintenance or repair that is improperly or incorrectly performed may void this warranty.

SERVICE

A network of authorised Sales and Service dealers has been established and these details are available from your supplier.

When service attention, or spares, are required for the machine, within or after the warranty period your supplier or any authorised dealer should be contacted. Always quote the registered serial number of the machine.
If any damage is apparent when delivery is made, report the details at once to the supplier of the machine.







Europe & Rest of The World Except North & South America

Ransomes Jacobsen Limited
West Road, Ransomes Europark, Ipswich, IP3 9TT
English Company Registration No. 1070731
www.ransomesjacobsen.com

North & South America

Jacobsen
1451 Marvin Griffin Road, Augusta,
Georgia 30906 - 3852, USA
www.Jacobsen.com